Article published online: 2023-09-26

The Effect of Working Length, Fracture, and Screw Configuration on Plate Strain in a 3.5-mm LCP Bone Model of Comminuted Fractures

S.H. Wainberg[1] N.M.M. Moens[1] Z. Ouyang[1] J. Runciman[2]

[1] Department of Clinical Studies, Ontario Veterinary College, Guelph, Ontario, Canada
[2] School of Engineering, University of Guelph, Guelph, Ontario, Canada

Address for correspondence S.H. Wainberg, DVM, DVSc, DACVS-SA, Ontario Veterinary College, Guelph, Ontario N1G 2W1, Canada (e-mail: swainber@icloud.com).

VCOT Open 2023;6:e122–e135.

Abstract

Introduction This study provides a comprehensive examination of plate strain under realistic fracture configurations. The effect of plate working length, plate contact, fracture length, and position on strain was evaluated using bone surrogates subjected to "load-controlled," nondestructive conditions.

Materials and Methods Five 3.5-mm locking compression plates (LCP) were instrumented with six strain gauges. The gauges were glued between holes in predetermined locations marked by laser engraving. Nine fracture models were created using bone surrogate, each representing a combination of the criteria under study: long versus short working length, degree of plate compression, fracture location, and fracture length. All five plates were tested under each of the nine configurations. The constructs were mounted in an Instron testing machine with a 5-kN load cell. Each specimen was cyclically loaded at a rate of 5 mm/min to 50, 100, and 200 N.

Results Decreased plate strain was noted with a short plate working length in all fracture configurations ($p < 0.05$). Increasing the plate working length increased the strain at higher loads and on the plate adjacent to the fracture gap. The size of the fracture gap and fracture location had minimal effects on plate strain ($p < 0.05$). Elevation of the plate off the bone (1.5 mm) resulted in increased plate strain under all loading conditions ($p < 0.05$).

Conclusion Our null hypothesis was rejected in that a short plate working length resulted in decreased plate strain in all comminuted fracture configurations. Our secondary hypothesis was validated in that elevation of the plate from the bone resulted in increased strain in all configurations. As plate strain identifies regions of mechanical weakness whereby a construct may prematurely fail by acute overload or cyclic fatigue, identifying factors that may increase plate strain allows the surgeon to reduce these variables as much as possible to reduce the incidence of implant failure and subsequent fracture failure.

Keywords
- orthopaedic implants
- orthopaedic surgery
- locking plates
- plate strain

received October 12, 2022
accepted after revision June 13, 2023

DOI https://doi.org/10.1055/s-0043-1774371.
ISSN 2625-2325.

Introduction

Strain is the local deformation of a structure as a result of an applied stress at that location. In orthopaedic surgery, understanding implant strain is essential as the local deformation of the implant under load can identify regions of mechanical weakness of the construct and identify areas where premature failure by acute overload or cyclic fatigue may occur.[1] Our understanding of bone biology has greatly improved over the past two decades. As a result, more "biologically friendly" methods of fixation have been developed to decrease the impact of the fixation on the bone itself and maximize its healing potential. As a part of this trend, the use of locking plates in a bridging fashion has become common practice in veterinary orthopaedics.[2–8] The parallel development of minimally invasive plate osteosynthesis has further accentuated this trend and comminuted fractures are commonly stabilized using long plates with a small screw density ratio.[9] As such, the surgeon has the ability to determine which screw holes to fill or leave open, ultimately controlling the working length of the implant.[9] By changing the plate working length, the surgeon can control fracture rigidity and interfragmentary strain, but modifying the construct stiffness also affects plate strain, which could potentially lead to catastrophic implant failure.

Controversy exists about the effect of plate working length on plate strain. Several studies have shown that decreasing the working length of a small fracture gap model placed in cyclical axial loading may increase plate strain compared with a longer plate working length. In a no-gap model, Ellis and colleagues showed significantly lower strains when screws were placed further away from the osteotomy site than when screws were positioned close to it.[10] This correlates with the findings in Stoffel and colleagues[11] whereby an increased plate working length reduced plate stress in a 1-mm fracture gap model. This has further been supported by several authors who have suggested that shortening the working length of the plate by placing screws closer to the fracture site increases plate strain, predisposing it to failure. Therefore, placing screws further apart is believed to increase the working length of the plate and distribute the strain over a longer area, thus increasing the compliance of the construct and decreasing the risk of implant failure.[9,12]

Contrary to the above-mentioned studies, other studies have demonstrated that plate strain is significantly lowered and more evenly distributed in large fracture gap constructs with a shorter plate working length placed in cyclical axial loading.[10,11,13,14] Chao and colleagues[14] demonstrated that larger plate working lengths resulted in larger bending moments on the plate, resulting in higher plate strain and higher plate failure when the working length is increased.

We believe that the different, and often contradictory, results of previous studies are due to methodological variations in construct testing. This may have led to the potential misinterpretation of the results and to the propagation of the concept that an increased working length better distributes strain along the plate and decreases plate strain in a fracture gap model despite the fact that several studies have demonstrated lower plate strain with a shorter working length.[10,11,13–15] We therefore propose to conduct a comprehensive examination of the plate strain using strain gauges under multiple realistic configurations of canine fractures, and to evaluate the effect of bone contact, screw placement, fracture length, and fracture position on plate strain using bone surrogates subjected to "load-controlled," nondestructive loading conditions. Our null hypothesis was that in various fracture gap models a shorter plate working length would have equal strain compared with a long plate working length. We also hypothesized that the greater the distance between the plate and the bone, the greater the strain across the plate. To test these hypotheses, strain was measured across six strain gauges fixed to five plates in nine different fracture configurations. Strain was recorded and compared across different forces of axial loading.

Materials and Methods

Bone Models

Fracture gap models were created using cylinders made of fourth-generation short fiber reinforced epoxy based on a diaphyseal bone model of an approximately 30-kg dog generating walking forces of 3.03 ± 0.16 N/kg.[13] The cylinders had an external diameter of 20 mm and a wall thickness of 3 mm (3403–42, fourth generation, 500-mm length, 20-mm outer diameter, 3-mm wall thickness, Sawbones, Vashon Island, WA, United States). The cylinders were cut to specific lengths to match the length of bone fragments required to match the nine configurations illustrated in ►**Fig. 1**. These configurations were chosen to encompass a variety of fracture configurations observed in veterinary medicine with the length of the fracture gap in the models, representing the area of comminution in the bone where minimal to no load sharing is occurring. Simple fractures in which bone reconstruction and load sharing can be achieved were not represented in this study. Based on the plate measurements and hole-to-hole distance, two screw holes were predrilled in each bone segment using a high-precision milling machine to obtain consistent and repeatable positioning of the bone segments between all constructs. Constructs 1 to 7 were predrilled with 2.8-mm drill bits to accommodate 3.5-mm locking screws, while constructs 8 and 9 were predrilled with 2.5-mm drill bits to accommodate 3.5-mm nonlocking cortical screws. The open extremities of the constructs (inner diameters) were machined to tightly fit two stainless steel end caps fitted into the extremities of the tubes. The end caps featured a conical recess to accommodate a stainless steel ball connected to the Instron testing machine (2580 Series Testing Machine, Instron, Norwood, MA, United States) to allow compression testing while maintaining 3 degrees of freedom to the bone segments.

Fracture Model Configurations

Different length bone segments were secured successively to the five instrumented plates to create the nine different fracture configurations for testing (►**Fig. 1**). Configurations

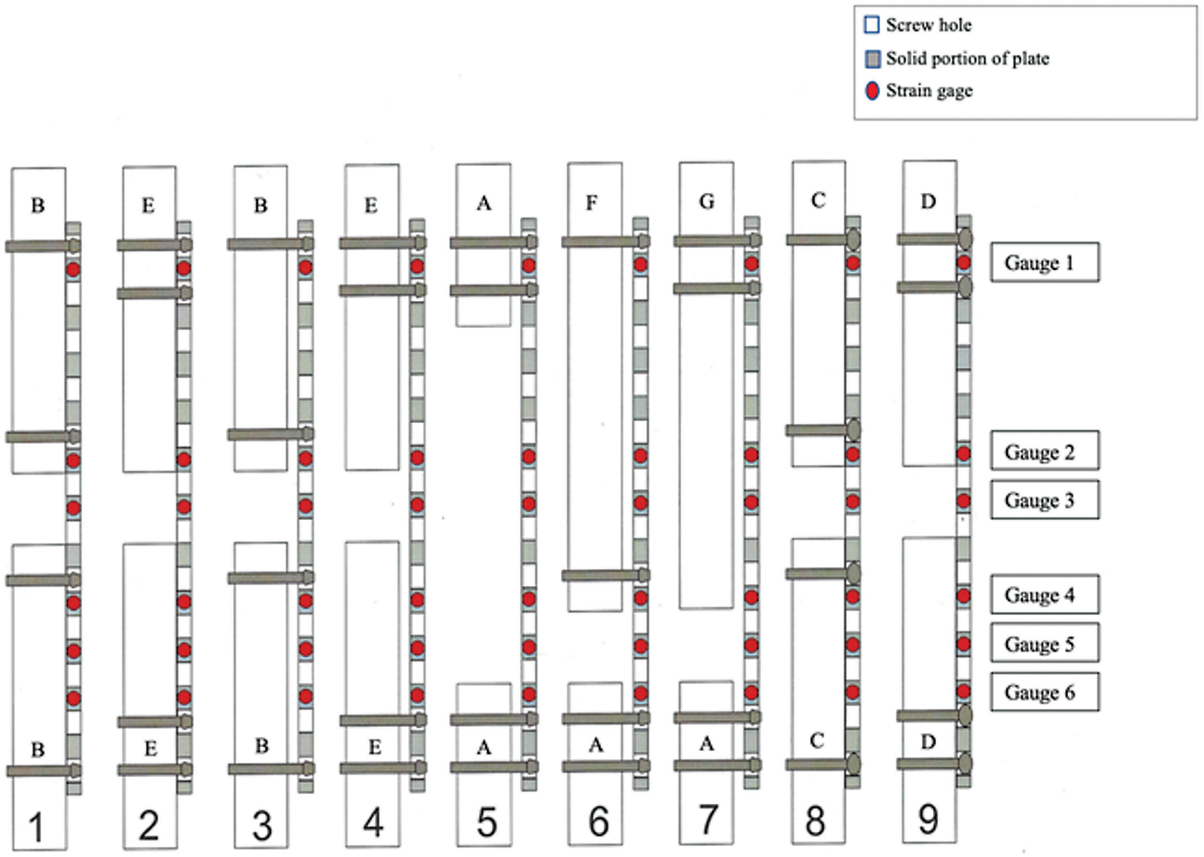

Fig. 1 Configurations of drilled bone models. In configurations 1 and 2, the locking plate is affixed against the bone. In configurations 3 to 7, the plate is elevated from the bone and in configurations 8 and 9, the plate is compressed onto the bone using cortical screws.

1, 2, 3, 4, 8, and 9 represented a short and long plate working length with a short symmetrical fracture gap (2 screw holes wide representing moderate fracture comminution). For configurations 1 and 2, the plates were affixed, in contact with the bone, with locking screws (212.110, locking screw, length 28 mm, diameter 3.5 mm self-tapping, Synthes, Westchester, PA, United States). For configurations 3 and 4, the plates were again affixed to the bone with locking screws, but the plates were elevated from the bone by 1.5 mm. For configurations 8 and 9, the plates were affixed and compressed to the bone by using nonlocking, cortical screws (Synthes 204.826, nonlocking screw 26 mm 3.5 mm self-tapping). Configurations 6 and 7 represented a short and long plate working length in an asymmetrical, short fracture gaps (2 screw holes wide) with the plate elevated from the bone. In configuration 5, the plate was elevated from the bone with locking screws, but the fracture gap was 8 screw holes wide, representing a highly comminuted fracture. The finished length of the constructs was 278 mm, caps included, with gaps of 22 mm for the short gaps and 100 mm for the long gaps.

For each plate, and for the seven configurations using locking screws, a randomization table was used whereby each locking screw configuration was tested in a different order. The two nonlocking screw configurations were tested at the end of each plate testing, with the order of testing of configurations 8 and 9 altering with each testing sequence. Nonlocking screw configurations were tested at the end because due to the positioning of the gauges on the plate, there were concerns that the larger screw head of the nonlocking screws could interfere and damage the strain gauge wires.

Instrumented Plates

Five 3.5-mm, 12-hole locking plates (Synthes 223.621 LCP 2.5 12 holes) were used for instrumentation of each of the nine configurations. The location of the strain gauges was marked on the plate by laser engraving using a precision laser system (PLS6.150D, Universal Laser Systems, Scottsdale, AZ, United States; 5% power/150 W, 3.5-mm focal point depth from bottom surface). The position of each gauge was selected based on suspected areas of points of interest in the plate as well as to provide an overall representation of different areas along the plate. Rectangles measuring 1.5 mm in height and 1.0 mm in width were engraved into the plate at the intended strain gauge locations. The engraved rectangles were positioned on the midline and 0.75 mm from the edge of the nonlocking portion of the combi-hole (►**Fig. 2**). Using magnification, six strain gauges (015LW, Vishay Micro-Measurements, Toronto ON, Canada) were secured to each of the six plates within the delineated laser markings using the manufacturer adhesive and guidelines (M-Bond 610, Micro-

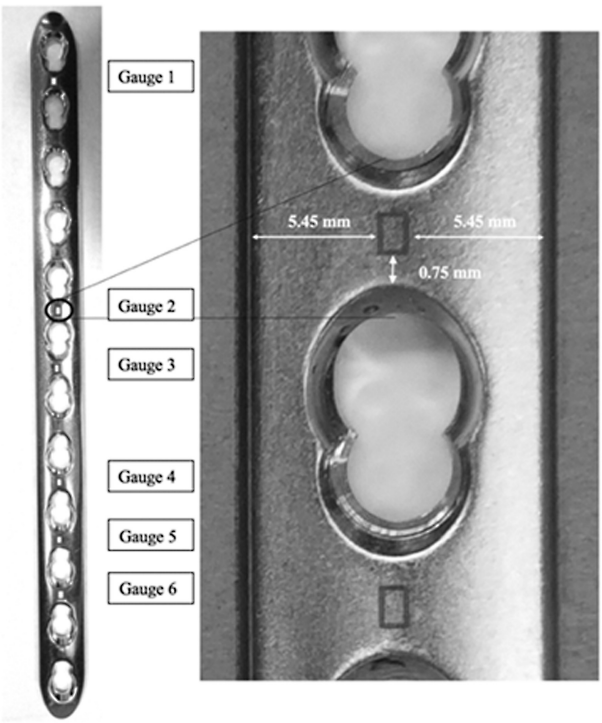

Fig. 2 Rectangles measuring 1.5 mm in height and 1.0 mm in width were etched into the plate at the future location of the strain gauges using a precision laser.

Measurements, Raleigh, North Carolina, United States). The length of the prewired strain gages were cut to approximately 300 mm to reduce unnecessary resistance in the system. The strain gage wires were connected to the amplifier cables using quick release connectors (Molex style 3-pin locking connector) to allow easy connection and disconnection of the plate to the system.

Mechanical Testing and Strain Measurement

The instrumented plates were secured to the indicated segment according to the randomization table. All constructs were assembled using four 3.5-mm locking/nonlocking screws following the standard AO principles. For configurations 3 to 7, elevation from the bone was obtained by temporarily inserting 1.5-mm steel shims between the plate and the bone during screw tightening. All locking screws were tightened using a 1.5-Nm torque limiter. Nonlocking screws were tightened by the same individual by holding the screwdriver with three fingers while applying torque. Once testing of a particular configuration was complete, plates and locking screws were carefully removed, replaced with new bone segments corresponding to the next configuration, and the screws were retightened. The bone model cylinders were changed after every test and new cylinders were used for each configuration.

The amplifier was recalibrated for each new plate prior to testing. Once a new configuration was created, the strain gauges were connected to the multichannel amplifier and the designated data collection computer. The strain gauges were zeroed with the sample unloaded and supported in a horizontal position. The constructs were mounted in the Instron testing machine instrumented with a 5-kN load cell (Instron 2580 static cell) and preloaded to a load of 5 N (►**Fig. 3**). Pretesting cycling was performed for each configuration by cyclically loading the constructs five times between 5 and 50 N at a rate of 1 mm/min. Following pretesting cycles, testing was performed for each configuration with cyclical loading at a rate of 5 mm/min up to 50, 100, and 200 N, seven times at each respective force and returning to 5 N between each cycle. Load/displacement data as well as the strain measurements for each of the strain gauges were collected during testing at 100 Hz.

Statistical Analysis

The statistical analysis was divided into three parts. Part 1 evaluated plate positioning relative to the bone model in both short (constructs 1, 3, and 8) and long plate working length (constructs 2, 4, and 9). This was performed using a general linear model that included the fixed effects of length, distance, force, gauge, and all interaction terms. Part 2 evaluated the symmetric (constructs 3 and 4) versus asymmetric fracture (constructs 6 and 7) gaps. This was performed using a general linear model that included the fixed effects length, fracture configuration, force, and gauge. All interaction terms were included in the model. Part 3 evaluated the size of the fracture gap and included constructs 4 and 5. The fixed effects of length, force, gauge, and all interaction terms were included in the

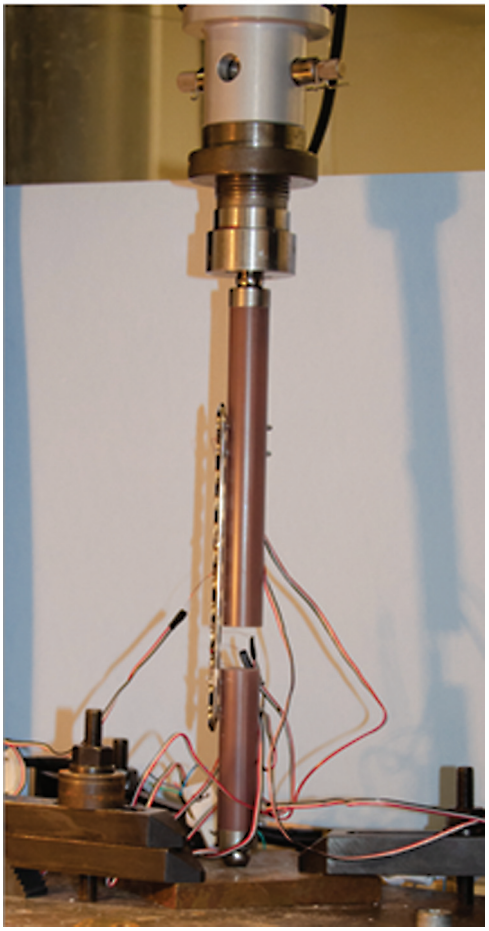

Fig. 3 Bone model construct loaded in an Instron testing machine with 5-kN load cell.

model. For all models, the plate was entered as a random effect. Data were checked for normality by examination of the residuals and Shapiro–Wilk and Kolmogorov–Smirnov tests. Transformations were attempted to improve normality. If the overall *f*-test was significant, Tukey's post hoc tests were used for planned pairwise comparisons. Significance was set at *p*-value less than 0.05.

Results

The mean strain and standard deviation for five cycles of testing of all gauges, loads, and configurations are depicted in ►**Appendix Table A1**.

The maximum plate strain observed was 1,245.4 με (►**Fig. 4**). Strain increased as the load was increased in all configurations. With the exception of the asymmetrical configurations (constructs 6 and 7), the highest strain was always observed at gauge 3 overlying the fracture gap. At 50 N, plate strain over the fracture gap ranged from 130.7 to 168.9 με. At 100 N, the range increased from 296.5 to 417.7 με, and the range was 708.7 to 1,245.5 με at 200 N. Doubling the load increased the strain by more than double the strain at the lower load. Succeeding gauge 3, gauge 2 consistently recorded the second highest strain. The strain for the following gauges subsequently decreased as the gauges were placed further away from the fracture gap. The gauge that located on the section of the plate consistently located between two screws in all configurations (gauge 1) showed some of the lowest strain values at all loads (−1.2 to 42.4 με at 50 N, −11.6 to 102.9 at 100 N, and −31.3 to 252 με at 200 N).

Effect of Plate Working Length with Symmetric Fracture Gap

Throughout all the symmetric configurations, the greatest strain was present over the fracture gap (gauge 3). Strain at that location was significantly higher at the 200-N load with a larger fracture gap (construct 5). All other gauges had strain

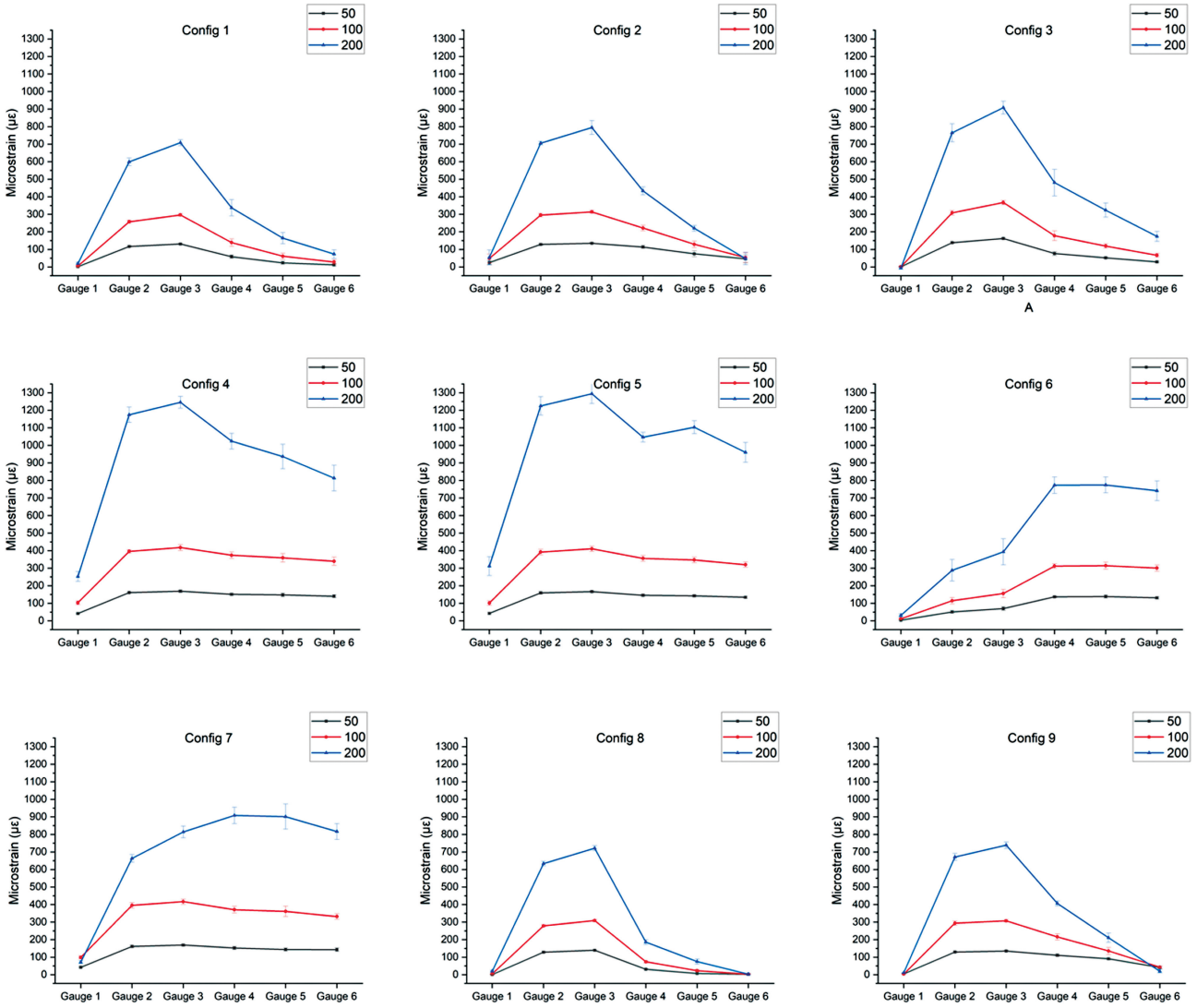

Fig. 4 Gauge number (*x*-axis) versus plate microstrain (*y* axis) at 50 N (*blue*), 100 N (*orange*), and 200 N (*gray*) for each of the nine configurations.

less than that of gauge 3. When the locking plate was affixed to the bone (configuration 1 vs. 2), a significant decrease in plate strain was noted at gauges 4 and 5 at 100 N and at gauges 1 to 5 at 200 N with a shorter plate working length (►**Fig. 4**). In configurations 3 and 4, when the plate was elevated off the bone, a significant decrease in plate strain was noted at gauges 4 to 6 at 50 N, gauges 1, 2, and 4 to 6 at 100 N, and in all gauges at 200 N with a shorter plate working length (►**Fig. 5**). When nonlocking screws were utilized (configurations 8 vs. 9), a shorter plate working length resulted in lower plate strain over the fracture gap (gauges 4 and 5) at 50, 100, and 200 N (►**Fig. 4**). All *p*-values are presented in ►**Appendix Table A2**.

In the long working length groups, blunting or deflection of the strain curves was evident at high loads. The deflection occurred as the end of the bone segment contacted the plate during bending (►**Fig. 6**).

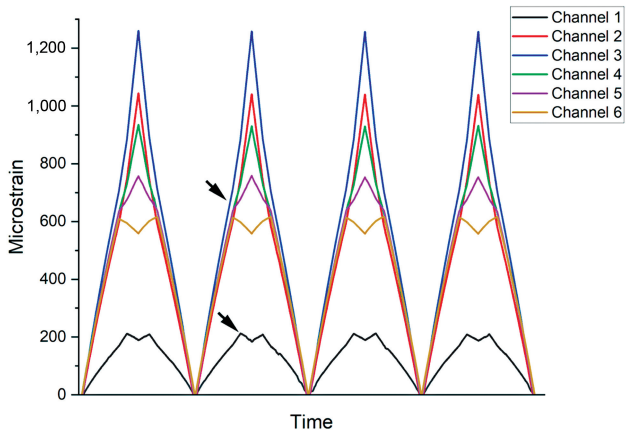

Fig. 6 Representative curve (strain vs. time) obtained during cyclic testing of configuration 4 at 200 N. Note blunting of the strain curves when the bone segments made contact with the plate at higher loads (*arrows*).

Effect of Plate Working Length with Asymmetric Fracture Gap

In models with an asymmetric fracture gap (constructs 6 and 7), an increase in plate working length resulted in a significant increase in plate strain at gauges 2 and 3 at 50 N, gauges 1 to 3 at 100 N, and gauges 1 to 5 at 200 N. At lower loads, the highest strain was recorded at gauge 3, while at high load the

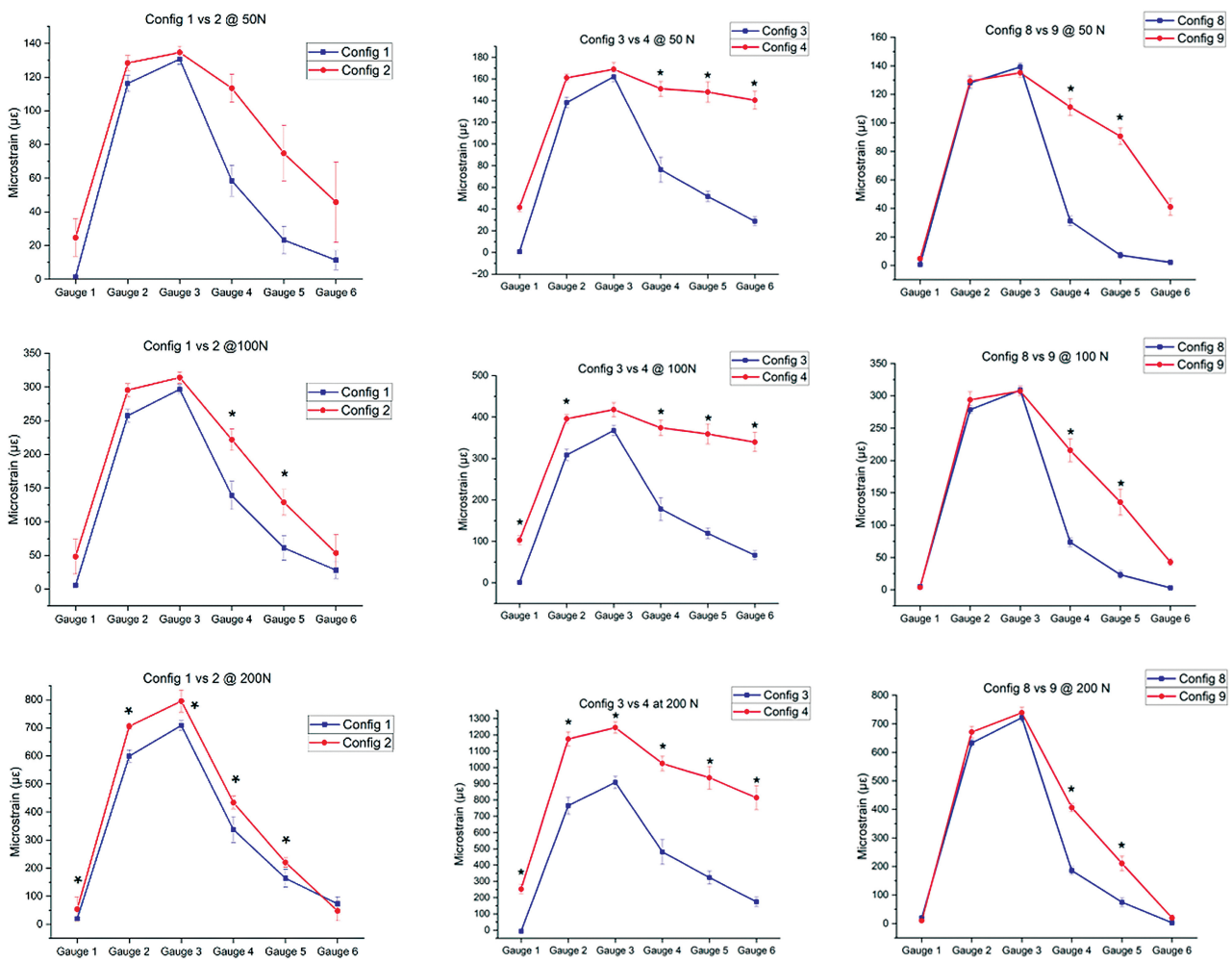

Fig. 5 Graphs depicting microstrain for the six different gauges at 50, 100, and 200 N for configurations 1 versus 2 (*left*), 3 versus 4 (*center*), and 8 versus 9 (*right*). Significant differences are noted by an asterisk.

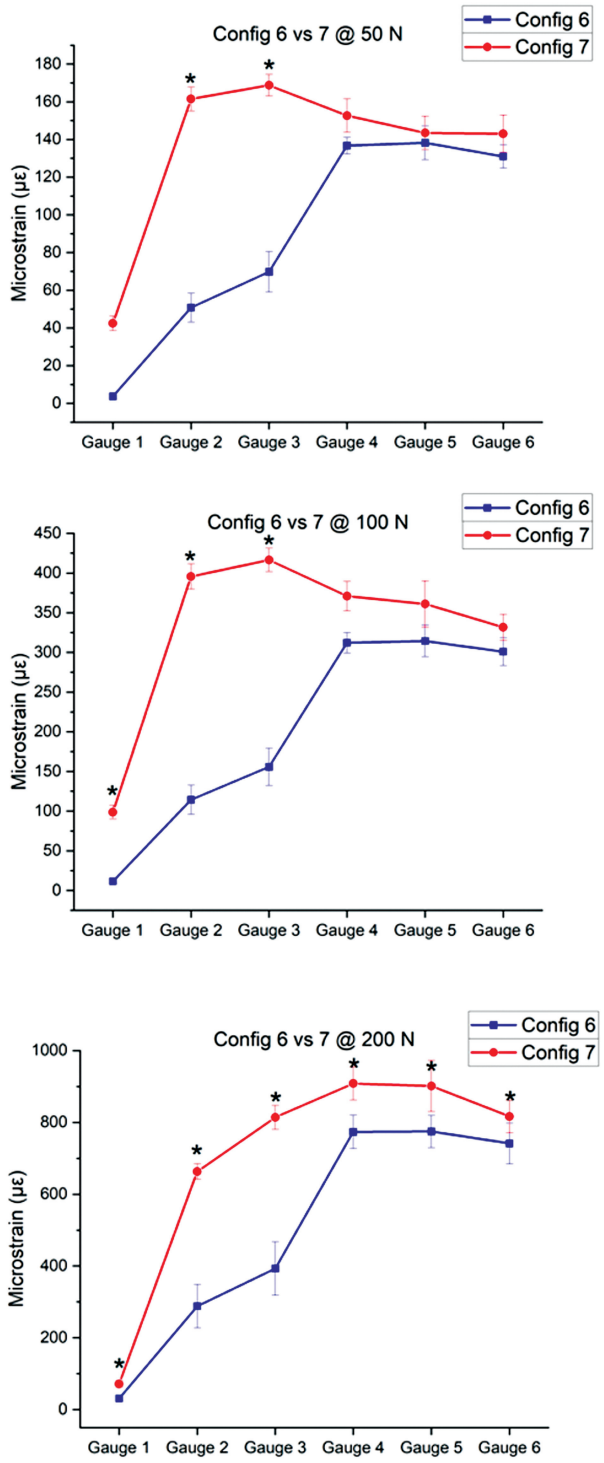

Fig. 7 Graph comparing microstrain for the six different gauges at 50, 100, and 200 N for asymmetric fracture configurations: configurations 6 (short plate working length) and 7 (long plate working length). Significant differences are noted by an asterisk.

highest strain was recorded on gauges 4 and 5 (►**Fig. 7**). The *p*-values are presented in ►**Table 1**.

Effect of Plate Position on the Bone

When configured to a symmetric short plate working length (configurations 1, 3, and 8), elevation of the plate away from the bone resulted in higher plate strain. When comparing the elevated plate and the plate in contact with the bone (configuration 3 vs. 1), the strain was higher at gauges 3 and 5 at 100 N and gauges 2 to 6 at 200 N. When comparing the plate elevated versus the plate compressed to the bone (configuration 3 vs. 8), an increase in strain was observed at gauges 3 to 6 at 100 N and gauges 2 to 6 at 200 N (►**Fig. 8**). When comparing the plate touching and the plate compressing the bone (configurations 1 vs. 8), higher strain was present with the plate touching the bone at gauge 4 at 100 N and gauges 4 to 6 at 200 N. The *p*-values are presented in ►**Table 2**.

When configured to a symmetric long plate working length (configurations 2, 4, and 9), elevation of the plate away from the bone (configuration 4) resulted in higher plate strain at gauges 5 and 6 at 50 N, gauges 2 to 6 at 100 N, and all gauges at 200 N compared with the plate touching the bone model. When comparing the plate touching (configuration 2) to the plate compressing (configuration 9), a higher strain was present only at gauges 1 and 3 at 200 N, and no significant differences were observed for any other gauges or loads (►**Fig. 9**). The *p*-values are presented in ►**Appendix Table A3**.

Effect of the Size of the Fracture Gap

In the models comparing the length of the fracture gap (configurations 4 vs. 5), higher plate strain was noted in the large fracture gap model at gauges 5 and 6 when tested at 200 N ($p < 0.001$; ►**Fig. 10**). No significant differences were noted at lower loads.

Effect of the Location of the Fracture Gap

A distal or asymmetric fracture gap affected the plate strain distribution and areas of greatest strain. Plate strain was greatest over the fracture gap at gauge 3 in the symmetric configuration. In the asymmetric configurations, strain was greatest at gauge 5 with a short plate working length. However, it was greatest at gauge 3 with a long plate working length at 50 and 100 N, but the area of greatest strain moved to gauge 4 at 200 N. With a long plate working length (configuration 4 vs. 7), an asymmetric fracture gap only resulted in a decrease in strain at gauges 1 to 4 at 200 N compared with the symmetrical fracture gap ($p < 0.001$). No differences were observed for any of the gauges at lower loads.

Discussion

Under 200 N, we observed a maximum strain ranging from 708 to 1,245 με. This is consistent with our theoretical calculation of strain in a simulated bone plate of rectangular cross-section under similar loading conditions (**Addendum A**). The null hypothesis was that there would be no significant difference in plate strain observed between constructs regardless of the plate working length. This working hypothesis was built on the fact that for an open gap model in bending, strain is determined by the material properties of the implant, load applied to the implant, and the area moment of inertia of that implant. Therefore, for a given

Table 1 Comparison of plate working length with asymmetric fracture configuration (configuration 6 vs. 7), $p < 0.05$

Force	Gauge	Standard error	*p*-Value	Upper	Lower
50	1	46.126	0.235	−30.139	122.391
	2	110.674	0.005	34.409	186.939
	3	99.016	0.011	22.751	175.281
	4	8.549	0.835	−72.407	89.506
	5	5.272	0.892	−70.992	81.538
	6	12.020	0.757	−64.245	88.285
100	1	110.384	0.005	34.119	186.649
	2	281.224	0.000	204.959	357.489
	3	260.867	0.000	184.602	337.132
	4	51.366	0.213	−29.591	132.323
	5	46.640	0.230	−29.625	122.905
	6	30.718	0.429	−45.547	106.983
200	1	102.898	0.008	26.633	179.163
	2	375.234	0.000	298.969	451.499
	3	420.842	0.000	344.576	497.107
	4	127.666	0.002	46.709	208.623
	5	126.727	0.001	50.462	202.992
	6	75.111	0.054	−1.154	151.376

Note: Highlighted boxes indicate significant differences.

implant, plate strain in any given location should be independent of the length of the implant.

Although our hypothesis held true at lower loads, higher loads resulted in a higher plate strain in constructs with a longer working length in a multitude of plate and fracture configurations, ultimately rejecting our null hypothesis.

The effect of plate working length on plate strain has been previously evaluated in several studies with conflicting results. Multiple experimental factors are proposed to be the source of the contradictory results including the type of plate and screw, the contact between the plate and the bone, the size of the fracture gap, and the method of loading.

Similar to our results, previous studies found that a longer working length resulted in higher strain compared with a shorter working length. Using strain gauges on a 20-hole 4.5-mm dynamic compression plate (DCP), Ellis and colleagues compared the plate strain in different-sized fracture configurations with a short and long plate working length.[10] The results supported our findings in that the plate strain was the lowest with a short plate working length compared with a long plate working length in both small (1-cm) and large (4-cm) fracture gap models.[10] Maximal strain was also noted in the screw holes adjacent to the fracture and dissipated along the length of the plate. Maxwell and colleagues also compared plate strain in short and long plate working lengths using strain gauges between two different plate types (12-hole 3.5-mm DCP and limited-contact DCP [LC-DCP]) in different screw configurations. As we concluded in our study, they found that plate strain was greatest over the fracture gap in all configurations; however, they did not find a significant difference at the fracture gap between screw configurations.[16] There are methodology differences between these two studies and our current study, which may explain some of the differences. In our study, locking compression plates (LCP) were used, while in the previous studies, DCP and LC-DCP plates were used and were attached to the bone using regular cortical screws that rely on compression of the plate onto the bone construct.

Chao and colleagues tested the difference in plate stiffness and fatigue life of 2.4-mm LCP between long and short working lengths. No differences in stiffness or fatigue life were observed between the two working lengths. Plate strain was not directly measured in this experiment; instead, indirect measures of stiffness and fatigue life were used. It must be noted, however, that although locking plates were used, cortical screws were used in each of the bone segment, resulting in compression of the fragments against the plate.[14]

It has been suggested that the effect of the working length on the strain would only be significant in configurations where the plate is away from the bone, but not significant when the plate is compressed to the bone.[16,17] Compression of the plate onto the bone generates friction that extends beyond the last screw. This friction generates load sharing between the bone and the plate, thus protecting the plate from bending and reducing the "effective" working length of the plate relative to the working length measured by the distance between the two central screws. This reduction in the actual working length would decrease the chances of observing a difference between long and short working lengths. When we only compare constructs built with cortical crews (configurations 8 and 9), our results are

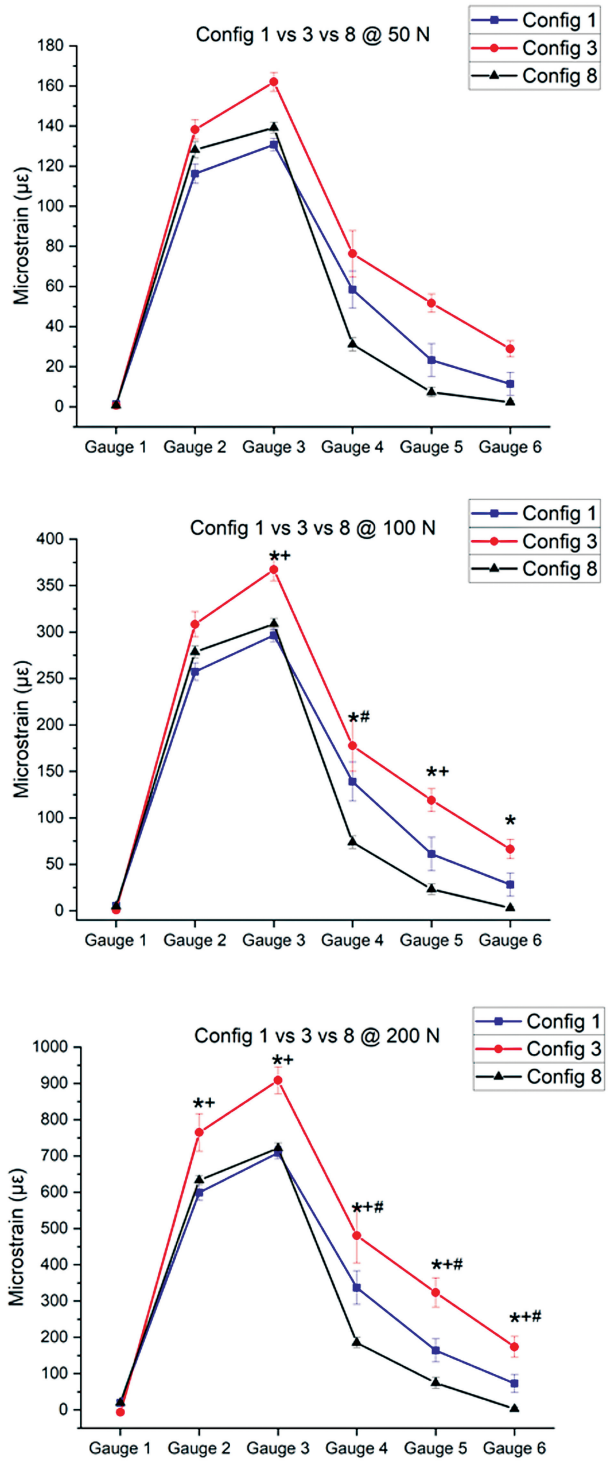

Fig. 8 Graph comparing microstrain for the six different gauges at 50, 100, and 200 N for short plate working length configurations: configurations 1 (plate abutting/touching the bone), 3 (plate elevated off the bone), and 8 (plate compressed to the bone). Significant differences between configurations 1 and 3 are indicated by +, between configurations 1 and 8 are indicated by #, and between configurations 3 and 8 indicated by an asterisk.

comparable to those found by Maxwell and colleagues[16] as no difference in strain was observed between long and short working lengths at the fracture site. However, as the friction is decreased or removed with the use of the locking screws (configurations 1 and 2), differences in strain over the fracture gap between short and long working lengths become more evident and significant at higher loads.

The effect of friction between the bone and the plate could still be observed despite elevation of the plate from the bone. Inflexions and blunting of the strain curves were observed as the end of the bone segment came into contact with the plate as the plate deflected under high loads (►**Fig. 6**). Similar tendency can also be observed in Maxwell and colleague's experiment.[16]

Instead of observing a similar strain between the different working lengths, we observed an increase in strain with an increased working length. The increase in strain with a long plate working length is a result of the increased flexibility of the plate with a longer working length as well as our loading method. As the plate bends more, the central section of the plate moves further away from the loading axis, thus increasing the bending moment on the plate (►**Fig. 11**). This resulted in further bending and an increase in strain compared with the stiffer implants with a shorter working length.[10,11,16] The increase in bending moment as the plate is bent would also explain the lack of proportionality between load and strain in all configurations. As the load was doubled (from 50 to 100 N or 100 to 200 N), the strain observed in some gauges would be more than doubled the strain at lower loads (►**Appendix Table A1**). Had the force been applied (and remained) directly on the neutral axis of the plate, a directly proportional relationship between force and strain would have been expected; however, due to the eccentric loading of the plate, an increase in the bending moment across the central cross-section of the plate was generated. Because implant failure is more likely to occur in area of highest strain, in comminuted fractures, in which load sharing cannot be achieved, plates with a longer working length are at higher risk of failure than similar plates with a shorter working length. Although some implant flexibility and interfragmentary strain is beneficial to bone healing,[7] excessive plate strain should be avoided. This can be controlled by placing screws closer to the fracture edges to decrease the working length or by combining different implants to increase the overall stiffness of the construct.[17,18]

In an asymmetric fracture configuration (configurations 6 and 7), the location of greatest plate strain was affected by the plate's working length; however, the magnitude of the strain was similar to that of the symmetrical configurations. With a short plate working length (configuration 6), the pattern of plate strain mimicked that of a symmetric fracture gap whereby strain was greatest directly over the center of the fracture gap (gauge 5) in the unsupported area of the plate. Conversely, with a long plate working length (configuration 7), strain was greatest at gauge 3 at lower loads (50 and 100 N) but shifted toward gauge 4 at higher loads (200 N) (►**Appendix Table A1**). In configuration 7, the long bone segment was not in contact with the plate due to the intentional gap between the plate and the bone. As such, the central portion of the plate remains located around gauge

Table 2 Comparison of short plate working length with different plate positioning on strain, $p < 0.05$

Force	Gauge	Configuration 3 vs. 8				Configuration 1 vs. 3				Configuration 1 vs. 8			
		Standard error	*p*-Value	Upper	Lower	Standard error	*p*-Value	Upper	Lower	Standard error	*p*-Value	Upper	Lower
50	1	29.2645777	0.96281913	−56.162299	58.8923736	29.2645777	0.94611004	−55.5480591	59.506614	29.2645777	0.98326447	−56.9130962	58.1415768
	2	29.2645777	0.73081175	−47.452109	67.602564	29.2645777	0.45383507	−35.5862093	79.4684637	29.2645777	0.68534378	−45.6614368	69.3932362
	3	29.2645777	0.4368844	−34.752868	80.3018048	29.2645777	0.28553496	−26.2328582	88.8218149	29.2645777	0.77109354	−49.0073265	66.0473465
	4	32.7187926	0.16820179	−19.151022	109.484013	32.7187926	0.58552107	−46.460592	82.174443	32.7187926	0.4043866	−91.6270872	37.0079478
	5	29.2645777	0.12953623	−13.074793	101.97988	29.2645777	0.33169989	−29.0866583	85.9680147	29.2645777	0.58457919	−73.5392022	41.5154708
	6	29.2645777	0.28927928	−26.475349	88.5793241	29.2645777	0.55096388	−40.0619544	74.9927186	29.2645777	0.6427022	−71.113942	43.940731
100	1	29.2645777	0.89404398	−53.6272	61.4274734	29.2645777	0.87553182	−52.9405889	62.1140841	29.2645777	0.98129302	−56.8407258	58.2139472
	2	29.2645777	0.30970483	−27.762283	87.2923899	29.2645777	0.08255915	−6.59861012	108.456063	29.2645777	0.46997923	−36.3636635	78.6910095
	3	29.2645777	0.04596507	1.05436946	116.109042	29.2645777	0.01604004	13.2351385	128.289812	29.2645777	0.67746016	−45.3465674	69.7081056
	4	32.7187926	0.00160408	39.6094786	168.244514	32.7187926	0.2375119	−25.6126099	103.022425	32.7187926	0.04687835	−129.539606	−0.90457103
	5	29.2645777	0.00114716	38.308273	153.362946	29.2645777	0.04834872	0.42249809	115.477171	29.2645777	0.19618861	−95.4131114	19.6415616
	6	29.2645777	0.01824353	11.8336614	126.888334	29.2645777	0.19083671	−19.1827197	95.8719533	29.2645777	0.28983186	−88.5437176	26.5109554
200	1	29.2645777	0.64552475	−44.056028	70.998645	29.2645777	0.65400487	−44.4011809	70.6534921	29.2645777	0.99059553	−57.8724895	57.1821835
	2	29.2645777	9.0667E−06	74.0156149	189.070288	29.2645777	2.9183E−08	107.978423	223.033096	29.2645777	0.24650299	−23.5645281	91.4901449
	3	29.2645777	4.6797E−10	129.294349	244.349022	29.2645777	3.2499E−11	142.093998	257.148671	29.2645777	0.66206835	−44.7276872	70.3269858
	4	32.7187926	7.2933E−18	230.81935	359.454385	32.7187926	1.4679E−05	79.1958768	207.830912	32.7187926	4.823E−06	−215.94099	−87.3059554
	5	29.2645777	3.3972E−16	191.409887	306.46456	29.2645777	8.5671E−08	102.057677	217.11235	29.2645777	0.00241125	−146.879547	−31.8248737
	6	29.2645777	1.0194E−08	113.601756	228.656429	29.2645777	0.00060881	43.5668931	158.621566	29.2645777	0.01715286	−127.562199	−12.507526

Note: Highlighted boxes indicate significant differences.

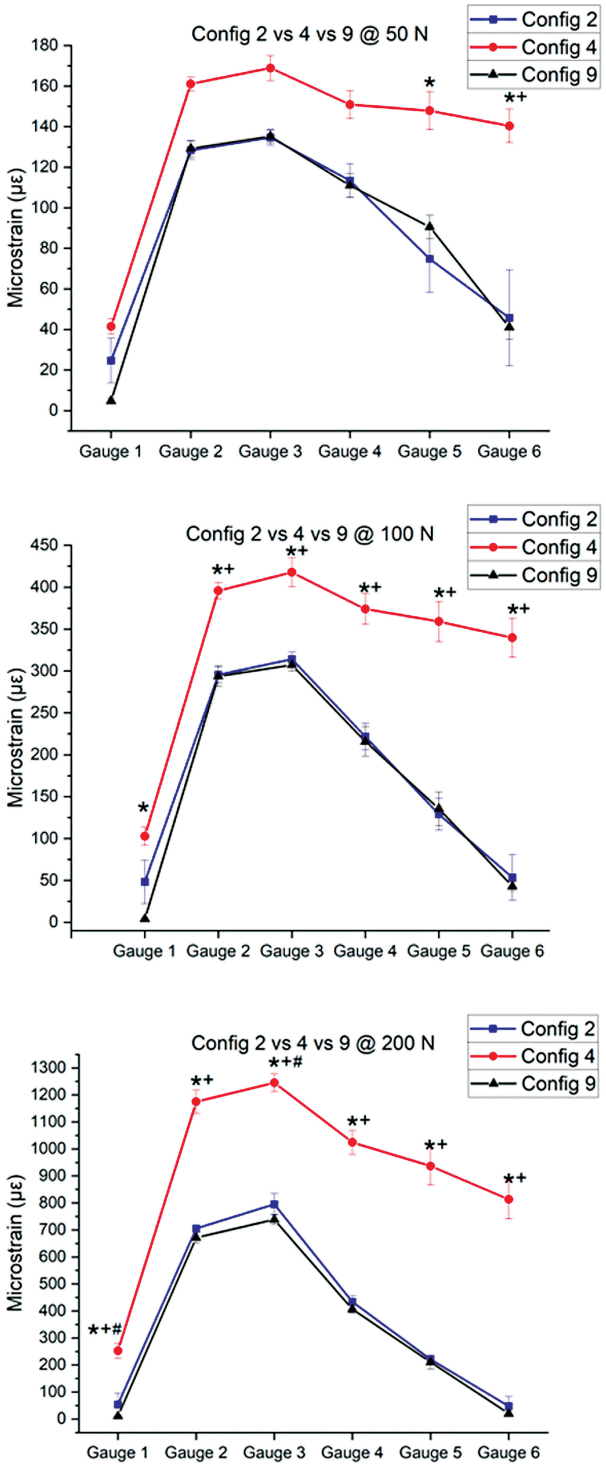

Fig. 9 Graph comparing microstrain for the six different gauges at 50, 100, and 200 N for long plate working length configurations; configurations 2 (plate abutting/touching the bone), 4 (plate elevated off the bone), and 9 (plate compressed to the bone). Significant differences between configurations 2 and 4 are indicated by an asterisk, between configurations 2 and 9 indicated by #, and between configurations 4 and 9 indicated by +.

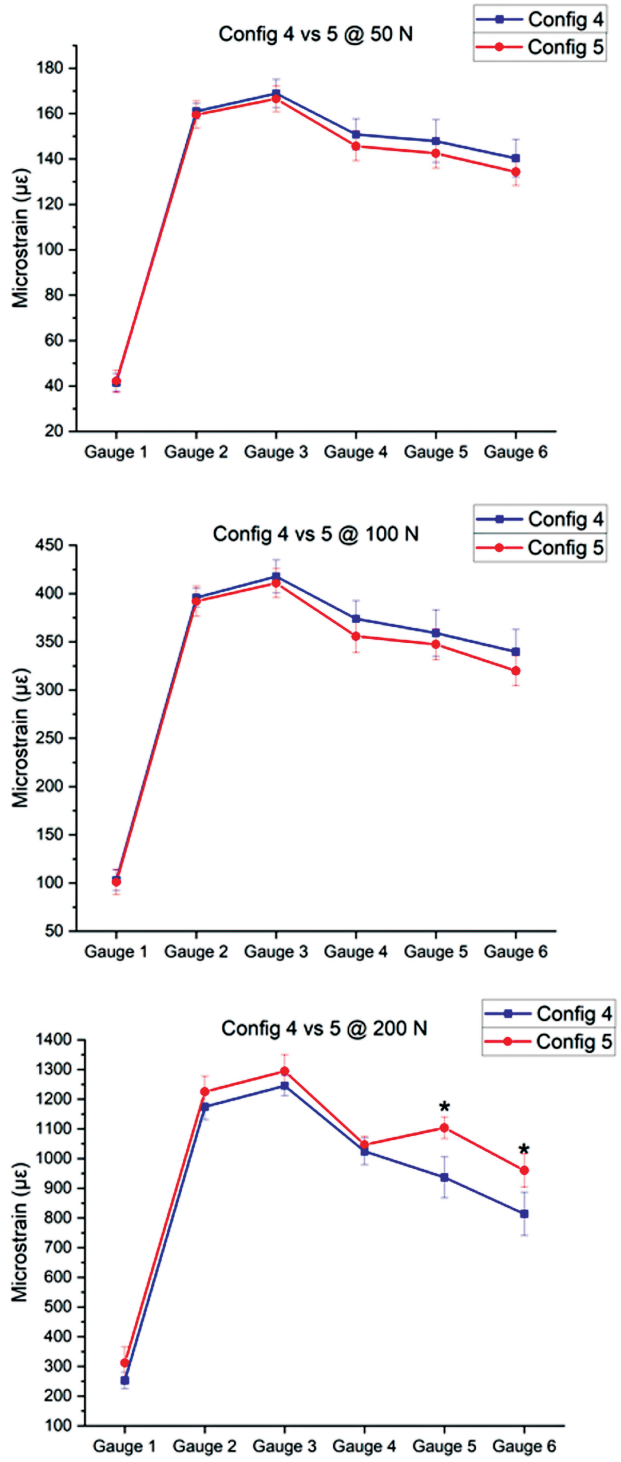

Fig. 10 Comparison of strain at different gauges in a small versus large fracture gap model (top graph = 50 N, bottom graph = 200 N). Significant differences are noted by an asterisk.

3. As the construct bent, the end of the long bone segment contacted the plate, reducing the strain at gauges 2 and 3 but shifting the point of highest strain toward the fracture gap (gauges 4 and 5). In veterinary medicine, distal radial and ulnar fractures are commonly seen in dogs and the fracture often occurs in the distal third of the bone. This model was evaluated to represent these fractures.

This study found that plate strain in the asymmetric fracture gap model with a short plate working length was greatest in the holes centered over and around the fracture

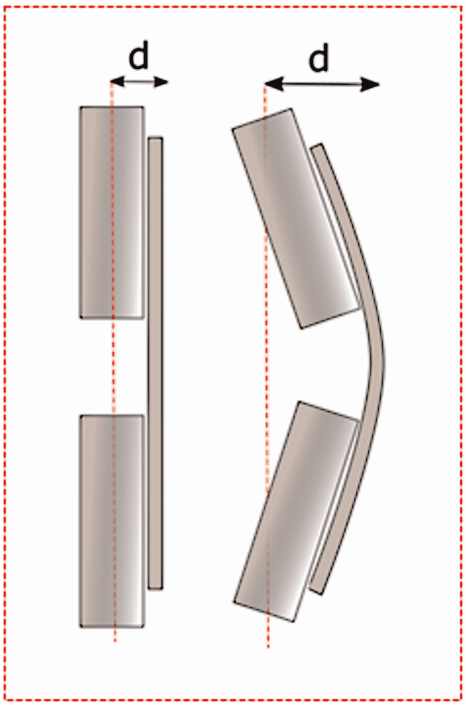

Fig. 11 Diagram showing the increased bending of the plate that occurs with increased forces results in an increase in distance (*d*) between the point of application of force and the plate. This results in an increased bending moment causing the increase in strain.

gap in the unsupported area of the plate. Although a long plate working length resulted in more even distribution of strain in the holes above the fracture gap, the magnitude of strain remained unaffected by the fracture location, and a short plate working length resulted in an overall lower plate strain compared with a long plate working length as the screws placed closer to the fracture gap provided a stiffer, more supportive construct.

Our experiments proved that a short working length overall resulted in a lower plate strain and should result in a decreased risk of implant failure. There are, however, several other studies that did indeed find that a longer working length decreases strain over the gap. Several experiments with very small fracture gap models have demonstrated that plate strain increases with a short working length.[10,11,19] In those experiments, the small fracture gap did allow the bone to contact when the fracture was loaded, therefore allowing load sharing with the plate. Bone contact between the fragments would limit plate deformation, thus limiting plate strain. This represents a major difference compared with our study, in which the bone ends were never contacting each other during loading. We specifically chose the size of the gaps to represent fractures with moderate and large area of comminution repaired with a bridging plate and in which load sharing does not occur. We believe that it is a situation that is far more likely in small animal fracture repair due to the comminuted nature of many fractures and the current trend to use longer bridging implants without attempting reconstruction of the intermediate fragments. We also believe that for simple fractures that could potentially contact during loading, there is strong evidence that the gap should be closed and interfragmentary compression should be applied to provide strong load sharing rather than purposefully maintaining a small gap between fragments.[10,11]

Our secondary hypothesis was validated in that elevation of the plate relative to the bone (elevated vs. in contact versus compressed) had a significant impact on plate strain. Elevating the plate from the bone resulted in an increase in strain. This increase is evident and significant on all gauges at 100 and 200 N. Although our findings confirm the general notion that moving the plate away from the bone increases plate strain,[11,20] our results slightly differ from those observed by Ahmad and colleagues[20] and Kowalski and colleagues,[21] as we found that moving the plate away from the bone by 1.5 mm already resulted in significant increase in plate strain. In Ahmad and colleagues' experiment, significant differences were not observed until the plate was moved 2 mm away from the bone,[20] while in Kowalski and colleagues' experiment, differences were not noted until the plate was elevated by 5 mm from the bone.[21] The differences in our findings could be because these studies did not directly measure plate strain but relied on stiffness of the constructs to determine the effect. The size of the implant may also have influenced the results as a larger bone plate was used (4.5 mm). These larger implants may have been less affected by a small variation in distance. In our experiment, we did not detect any difference between the different plate elevations when the constructs were loaded at 50 N, but the difference became significant at higher loads. Similarly, a larger plate could also require higher loads for differences to become evident. The increased plate strain can be explained by the increased lever arm and subsequent increased bending moment sustained by the plate due to the increased distance between the loading axis and the plate (►**Fig. 12**). In addition, the lack of plate–bone contact results in decreased frictional forces between the plate and the bone, which would help distribute forces applied to the construct.

Although there are many biological and practical reasons why locking plates should be placed away from the bone, biomechanically, our results suggest that the distance between the plate and the bone should be minimized to decrease plate strain and minimize the risk of implant failure. Therefore, whenever possible, placement of the plate as close to the bone as possible should always be considered and attempted in fracture fixation. With the development of locking plates, plate contouring to achieve plate–bone contact is less critical; however, with the results of this and previous studies, it is important to note that plate elevation does significantly increase plate strain, even when elevated only 1.5 mm off the bone (as evaluated in the current study). This is something to consider in complex fractures where anatomical reconstruction and plate contouring are not possible or for minimally invasive plate osteosynthesis repairs in which the plate is often placed away from the bone. As plate strain is greater in these applications, it may be beneficial to decrease the plate working length by placing screws closer to the fracture gap or providing additional

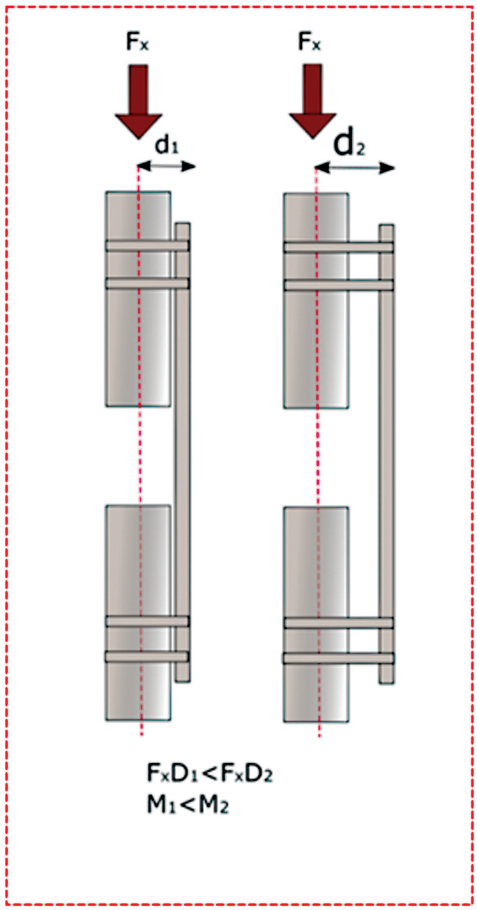

Fig. 12 Diagram demonstrating that further placement of the plate from the center (load-bearing axis) of the bone results in an increased bending moment and subsequent increased strain.

protection to the plate with an intramedullary pin or other stabilization method. Contrary to plate elevation, minimal differences were observed when the plate was compressed to the bone rather than just apposed onto it. This is consistent with our theory that the distance between the loading axis and the plate axis would be similar between the two constructs.

The size of the fracture gap also had a significant impact on plate strain at higher loads. A very large fracture gap resulted in increased plate strain when loaded at 200 N due to the large amount of unsupported portion of the plate. Thus, when internal fixation with a bone plate is performed for a large fracture gap or comminuted fracture that does not allow for load sharing, further stabilization with use of an intramedullary pin is recommended to reduce plate strain. The current study evaluated two different sized fracture gaps (2 and 6 holes), both of which were greater than 2 mm. A previous study identified that in very small ($<$ 2 mm) or no gap models a long plate working length resulted in a significant reduction in plate and screw strain.[11] As this study only evaluated fracture gap sizes greater than 2 mm, it is important to note that the conclusions drawn on the plate working length apply to the application of bridge plating and not for interfragmentary gaps smaller than 2 mm where compression of the fracture gap can be performed. Ideally, a no fracture gap or less than 2 mm fracture gap model would have been evaluated to support this conclusion.

It has been demonstrated that plate failure is most likely to occur along an area of increased plate strain.[9,16] In our study, the area of highest plate strain was always observed over the fracture gap for all symmetrical fracture configurations regardless of the plate working length and plate position. This is consistent with the findings of Ellis and colleagues,[10] Maxwell and colleagues,[16] and Kanchanomai and colleagues,[19] who also found that strain was highest adjacent to the fracture gap. These results are, however, contrary to the results found by Pearson and colleagues[13] who found the lowest strain at the level of the fracture gap in the long working length model and Chao and colleagues[1] who observed failure at the end of the bone in one fragment and at the first screw in the other fragment. This suggests that the highest strain would have occurred at those locations. It must be noted that strain was not directly measured in Chao and colleagues' experiment and the plate failure point was assumed to be the point of highest strain. Therefore, the difference in mode of failure may be linked to the difference in mode of testing and the use of cadaveric femurs in Chao and colleagues' experiment,[1] which loaded the plate differently than in our experiment and may have caused a shift in the area of highest strain.

Limitations of this study include the use of synthetic bone models in addition to a single loading mode (3- and 4-point bending was not assessed). Although bone surrogates do not fully replicate all the features of bone, models were utilized instead of cadavers for a multitude of reasons. Standardization using cadavers is difficult as breed variations can result in a variation of size and shape of the bones, which would not be uniform. This would change the bending moment applied to the plate by changing the distance between the plate and the loading axis. All the measurements were taken from the strain gauges located on the plate; therefore, the bone surrogate was merely a conduit to apply the load to the plate itself. As long as the bone surrogate is expected to sustain the load without breaking, it is expected to only play an insignificant role in the results. In addition, due to expenses and specimen handling, obtaining cadavers is often challenging. It would have also added a significant variable to our experiment, which would have decreased the power of the statistical analysis. Axial compression was the only force assessed in this study as the purpose was to identify regions of increased plate strain that may be subject to early fatigue and plate failure versus identifying the weakest area of a plate construct. Another limitation of this experiment is the placement of strain gauges on the solid portion of the plate between screw holes as opposed to immediately adjacent to screw holes. Because there is a decrease in the cross-sectional area of the plate adjacent to the screw holes, the strain in those locations is expected to be higher than at the solid portion of the plate. Similar to the LC-DCP, LCP have cutouts in the solid portion of the plate to even out the area moment of inertia of the implant along its length.[22] Nevertheless, strain gauges can only record the average strain under their surface area; therefore, we cannot be sure that the gauges

recorded the maximum strain experienced by the plate. It was unfortunately necessary to place the gauges on the solid portion of the plate due the physical space required to properly glue the gauges to the plate. Our aim was not to measure the exact or highest strain experienced by the plate, but to compare the different plate configurations to determine their effects on plate strain. Because the same construct and gauge locations were used for all configurations, we believe that the comparisons between constructs are valid.

This study concluded that a short plate working length lowered the overall plate strain in multiple comminuted fracture configurations. Increasing the plate working length increased the plate strain at higher loads and on the plate adjacent to the fracture gap. A shorter fracture gap with a long working length only had a negligible protective effect at higher loads as the surrogate contacted the plate during bending. In all plate positioning and fracture configurations, the plate strain was always greatest over the fracture gap, and fracture location had a minimal effect on the plate strain. Plate positioning influenced the plate strain, whereby plate elevation away from the bone resulted in increased strain compared with configurations where the plate was in contact the bone. This effect was significantly greater when configured to a long plate working length.

Funding
Funding for this research was provided by the Ontario Veterinary College PetTrust Fund.

Conflict of Interest
None declared.

References

1 Chao P, Lewis DD, Kowaleski MP, Pozzi A. Biomechanical concepts applicable to minimally invasive fracture repair in small animals. Vet Clin North Am Small Anim Pract 2012;42(05):853–872, v
2 Szypryt P, Forward D. The use and abuse of locking plates. Orthop Trauma 2009;23(04):281–290
3 Cronier P, Pietu G, Dujardin C, Bigorre N, Ducellier F, Gerard R. The concept of locking plates. Orthop Traumatol Surg Res 2010;96 (04):S17–S36
4 Smith WR, Ziran BH, Anglen JO, Stahel PF. Locking plates: tips and tricks. J Bone Joint Surg Am 2007;89(10):2298–2307
5 Tan SLE, Balogh ZJ. Indications and limitations of locked plating. Injury 2009;40(07):683–691
6 Karnezis IA, Miles AW, Cunningham JL, Learmonth ID. "Biological" internal fixation of long bone fractures: a biomechanical study of a "noncontact" plate system. Injury 1998;29(09):689–695
7 Perren SM. Evolution of the internal fixation of long bone fractures. The scientific basis of biological internal fixation: choosing a new balance between stability and biology. J Bone Joint Surg Br 2002;84(08):1093–1110
8 Leunig M, Hertel R, Siebenrock KA, Ballmer FT, Mast JW, Ganz R. The evolution of indirect reduction techniques for the treatment of fractures. Clin Orthop Relat Res 2000;(375):7–14
9 Gautier E, Sommer C. Guidelines for the clinical application of the LCP. Injury 2003;34(Suppl 2):B63–B76
10 Ellis T, Bourgeault CA, Kyle RF. Screw position affects dynamic compression plate strain in an in vitro fracture model. J Orthop Trauma 2001;15(05):333–337
11 Stoffel K, Dieter U, Stachowiak G, Gächter A, Kuster MS. Biomechanical testing of the LCP: how can stability in locked internal fixators be controlled? Injury 2003;34(Suppl 2):B11–B19
12 Windofl M, Perren SM. Basic mechanobiology of bone healing. In: Babst R, Bavonratanavech S, Pesantez R, eds. Minimally Invasive Plate Osteosynthesis. 2nd ed. Stuttgart: Thieme, AO Publishing; 2012:15–30
13 Pearson T, Glyde M, Hosgood G, Day R. The effect of intramedullary pin size and monocortical screw configuration on locking compression plate-rod constructs in an in vitro fracture gap model. Vet Comp Orthop Traumatol 2015;28(02):95–103
14 Chao P, Conrad BP, Lewis DD, Horodyski M, Pozzi A. Effect of plate working length on plate stiffness and cyclic fatigue life in a cadaveric femoral fracture gap model stabilized with a 12-hole 2.4 mm locking compression plate. BMC Vet Res 2013;9(01): 125–132
15 Foster MP, Papp S, Poitras P. Effects of screw position on construct stiffness, bone strain and plate strain in fracture fixation with locking plate. J Bone Jt Surgery Br 2009;91-B(Supp_II):236
16 Maxwell M, Horstman CL, Crawford RL, Vaughn T, Elder S, McLaughlin R. The effects of screw placement on plate strain in 3.5 mm dynamic compression plates and limited-contact dynamic compression plates. Vet Comp Orthop Traumatol 2009;22(02):125–131
17 Hulse D, Hyman W, Nori M, Slater M. Reduction in plate strain by addition of an intramedullary pin. Vet Surg 1997;26(06):451–459
18 Pearson T, Glyde MR, Day RE, Hosgood GL. The effect of intramedullary pin size and plate working length on plate strain in locking compression plate-rod constructs under axial load. Vet Comp Orthop Traumatol 2016;29(06):451–458
19 Kanchanomai C, Muanjan P, Phiphobmongkol V. Stiffness and endurance of a locking compression plate fixed on fractured femur. J Appl Biomech 2010;26(01):10–16
20 Ahmad M, Nanda R, Bajwa AS, Candal-Couto J, Green S, Hui AC. Biomechanical testing of the locking compression plate: when does the distance between bone and implant significantly reduce construct stability? Injury 2007;38(03):358–364
21 Kowalski MJ, Schemitsch EH, Harrington RM, Chapman JR, Swiontkowski MF. A comparative biomechanical evaluation of a noncontacting plate and currently used devices for tibial fixation. J Trauma 1996;40(01):5–9
22 Perren SM, Klaue K, Pohler O, Predieri M, Steinemann S, Gautier E. The limited contact dynamic compression plate (LC-DCP). Arch Orthop Trauma Surg 1990;109(06):304–310