Supercritical Fluid Chromatography – Theoretical Background and Applications on Natural Products

Authors Anja Hartmann, Markus Ganzera

Affiliation Institute of Pharmacy, Pharmacognosy, University of Innsbruck, CCB, Innsbruck, Austria

Key words
- SFC
- supercritical fluid chromatography
- natural products analysis
- preparative
- analytical
- applications

Abstract

The use of supercritical fluid chromatography for natural product analysis as well as underlying theoretical mechanisms and instrumental requirements are summarized in this review. A short introduction focusing on the historical development of this interesting separation technique is followed by remarks on the current instrumental design, also describing possible detection modes and useable stationary phases. The overview on relevant applications is grouped based on their basic intention, may it be (semi) preparative or purely analytical. They indicate that supercritical fluid chromatography is still primarily considered for the analysis of nonpolar analytes like carotenoids, fatty acids, or terpenes. The low polarity of supercritical carbon dioxide, which is used with modifiers almost exclusively as a mobile phase today, combined with high efficiency and fast separations might explain the popularity of supercritical fluid chromatography for the analysis of these compounds. Yet, it has been shown that more polar natural products (e.g., xanthones, flavonoids, alkaloids) are separable too, with the same (if not superior) selectivity and reproducibility than established approaches like HPLC or GC.

received October 1, 2014
revised February 3, 2015
accepted March 4, 2015

Bibliography
DOI http://dx.doi.org/10.1055/s-0035-1545911
Published online April 23, 2015
Planta Med 2015; 81: 1570–1581 © Georg Thieme Verlag KG Stuttgart · New York · ISSN 0032-0943

Correspondence
Assoc. Prof. Dr. Markus Ganzera
Institute of Pharmacy, Pharmacognosy
University of Innsbruck
Innrain 80–82
6020 Innsbruck
Austria
Phone: + 43 5 12 50 75 84 06
Fax: + 43 5 12 50 75 84 99
markus.ganzera@uibk.ac.at

Abbreviations

ACN:	acetonitrile
APCI:	atmospheric pressure chemical ionization
CAD:	charged aerosol detector
CD:	circular dichroism
DAD:	diode array detector
DCM:	dichloromethane
DGC:	dense gas chromatography
DPPH:	2,2-diphenyl-1-picrylhydrazyl
ECD:	electron capture detector
ELSD:	evaporative light scattering detector
ESI:	electrospray ionization
FID:	flame ionization detector
FPP:	fully porous particles
FTIR:	Fourier transform infrared spectroscopy
GC:	gas chromatography
GMP:	good manufacturing practices
HPGC:	high-pressure gas chromatography
HPLC:	high-performance liquid chromatography
HPTLC:	high-performance thinlayer chromatography
IC:	ion chromatography
IMS:	ion mobility spectrometry
IPA:	isopropylamine
IR:	infrared
LOD:	limit of detection
MALDI-TOF-MS:	matrix-assisted laser desorption ionization time-of-flight mass spectrometry
MS:	mass spectometry
MTBE:	methyl tert-butyl ether
NMR:	nuclear magnetic resonance
ODS:	octadecylsilyl
OTC:	open tubular column
RP-HPLC:	reversed-phase HPLC
RSD:	relative standard deviation
SIC:	silver ion chromatography
SFC:	supercritical fluid chromatography
SFE:	supercritical fluid extraction
TAGs:	triacylglycerols
THF:	tetrahydrofuran
UHE/LP:	ultrahigh efficiency/low pressure

This document was downloaded for personal use only. Unauthorized distribution is strictly prohibited.

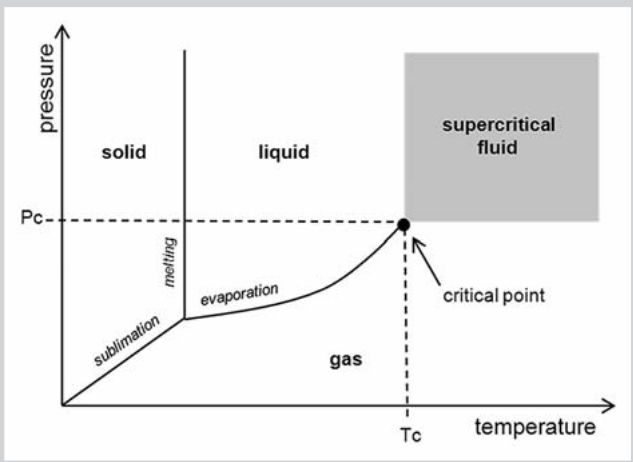

Fig. 1 Phase diagram of a compound indicating the supercritical fluid stage above critical pressure (Pc) and temperature (Tc).

Introduction

Whenever temperature and pressure exceed a substance-specific critical value (i.e., the critical point), a supercritical fluid of a compound is obtained (**Fig. 1**). In this state, neither higher pressure can revert it to a liquid again nor elevated temperatures to a gas. In simplified terms, supercritical fluids can be seen as highly compressed gases with liquid-like density [1]. They combine characteristics of both physical states in a unique way, such as low viscosity and high diffusivity [2]. In terms of chromatography (supercritical fluid chromatography), this results in a low pressure drop even at higher flow rates, faster separations, increased solvating power, and efficiencies, so that fluids in supercritical conditions often are considered as ideal mobile phases [2, 3]. Today, carbon dioxide-based fluids are used almost exclusively because of several reasons [4]. Critical temperature (31 °C) and pressure (74 bar) are easy to reach with the conventional type of HPLC instrumentation; CO_2 is inert, nonflammable and cheap, it can be liquefied and stored in cylinders without problems, and it is considered environmental friendly ("green"). The latter might not remain without opposition, but as carbon dioxide used for SFC is an industrial by-product, the overall environmental impact of using it is zero (in contrast to the production/disposal of regular solvents) [5]. The polarity of supercritical CO_2 is similar to hexane, but by adding modifiers like methanol, ethanol, or acetonitrile, solvent strength is adjustable, so that normal- or reversed-phase stationary phases can be utilized [6, 7]. Carbon dioxide, due to its rather low critical temperature, is also ideal for the analysis of thermo-labile compounds and in case the isolation of constituents is attempted, no final evaporation of the solvent is required. At atmospheric pressure, CO_2 converts to the gaseous state and discharges, leaving the purified fractions/compounds behind.

Technical Aspects

Historical development and current state of instrumentation

It is maybe a surprising fact that the first report on SFC, at this time the technique was called HPGC or DGC, occurred in the year 1962 already, slightly before the evolution of HPLC started. Klesper et al. used a mobile phase of supercritical fluoromethane derivatives to successfully separate a mixture of porphyrins on a polyethylene glycol stationary phase [8]. A few years later, Sie and coworkers described CO_2 as a suitable eluent and UV as a possible detection mode [9]. In the 1970 s, SFC instruments with pressure programming were constructed [10], the first preparative applications reported [11], and an SFC-MS interface described [12]. The decade thereafter brought mainly improvements in column technology, leading to two different strategies. OTCs developed by Novotny and coworkers resembled the GC columns used today, i.e., the inner surface of a silica capillary with a small internal diameter (typically 50 µm) is coated with a thin film of stationary phase, e.g., a polysiloxane [13]. These materials showed several disadvantages, such as that the mobile phase pressure could not be changed independently of the flow velocity, or the commonly used type of detector (FID) was incompatible with organic modifiers. This explains why the interest in this SFC variant faded rather quickly [14]. The second strategy, which was developed at the same time and is standard nowadays, is the use of packed columns as employed for HPLC [15]; for further details on stationary phases and SFC, see the respective chapter in this review. The design of a packed column SFC system is schematically shown in **Fig. 2**. As can be seen, it resembles the common HPLC setup to a large extent. In addition to pumps for the mobile phase (CO_2 and modifier), an injection and detection device, it requires two additional components: an oven to facilitate supercritical/subcritical conditions and a backpressure regulator, commonly positioned after the detector. Its function is to adjust the fluid pressure above the critical pressure independent of the mobile phase flow rate or composition. Thus, this electronic device originally developed by Saito et al. is most important to maintain SFC conditions throughout the entire separation system [1].

Stationary phases

Pure, liquefied carbon dioxide is a solvent with nonpolar character, and SFC was often considered an alternative for normal-phase chromatography only. In this context, polar stationary phases like silica gel, cyano- or aminopropyl-bonded silica are suitable options [16]. But as the eluotropic strength of CO_2 can be modified by polar additives, reversed-phase type materials (e.g., alkyl-bonded silica) are useable as well. Thus, in respect to column technology, SFC, at least as it is most commonly used today, resembles "standard" liquid chromatography to a large extent. The same stationary phases (including aromatic, halogenated, or porous graphitic carbon and polymeric phases) and column dimensions as in HPLC can be used regardless if the separations are performed in the subcritical or supercritical stage [17, 18]. For a differentiation of the latter two, see the comments below (Theoretical Considerations). This indicates that SFC is rather versatile in respect to applicable stationary and mobile phases, and both need to be considered in order to improve chromatographic performance and selectivity during method development.

This document was downloaded for personal use only. Unauthorized distribution is strictly prohibited.

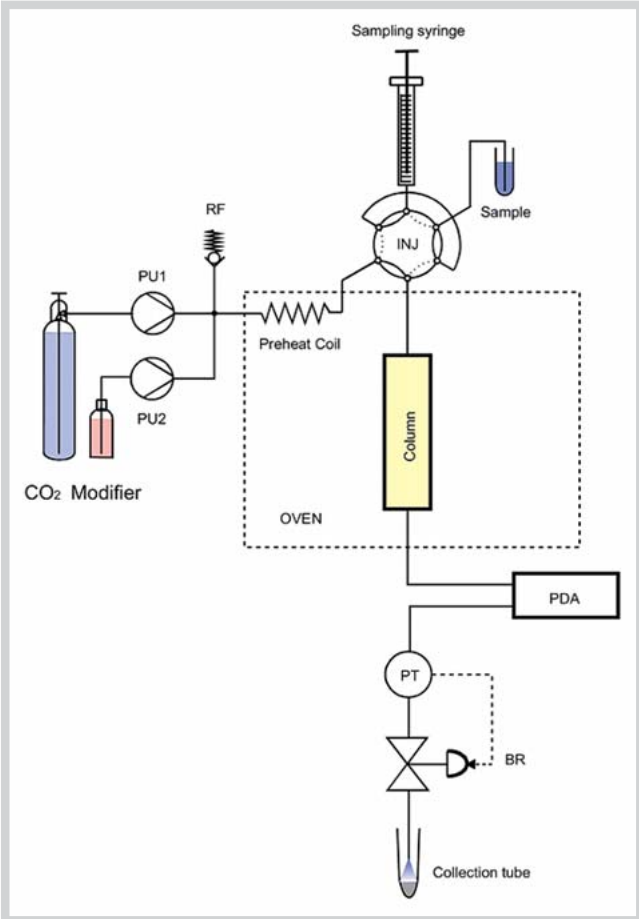

Fig. 2 Typical design of a supercritical fluid chromatography system, consisting of pumps for CO_2 (PU1) and modifier (PU2), safety relief valve (RF), injector (INJ), temperature controlled preheat coil and column, diode array detector (PDA), pressure transducer (PT), and backpressure regulator (BR). Reproduced with permission from [1]. (Color figure available online only.)

Detection

As for stationary phases, SFC is quite flexible in respect to the type of detector used. If the mobile phase consists of pure CO_2, IR or FID can be utilized; when a modifier is added DAD, ELSD, MS, CD, or CAD are options [16, 19–21]. Depending on the type of detector, the backpressure regulator of the instrument is positioned. For example, with DAD and CD, it needs to be after the detector to maintain the pressure (required for the liquid state of the mobile phase) in the detector; accordingly, detector cells have to be pressure resistant up to the maximum value reached during separation. For ELSD or MS, the mobile phase needs to be evaporated before detection/ionization anyway, so that the evaporation of CO_2 under ambient conditions is an advantage. In this case, the backpressure regulator is placed before the actual detection device, and the gaseous effluent can directly be introduced into the detector. The most popular SFC-MS interfaces are APCI and ESI. For ion generation, the addition of proton-donating organic modifiers like methanol is usually advantageous [22].

Theoretical Considerations

By definition, SFC-based separations should be performed under supercritical conditions, which only occur above critical pressure and temperature. These values vary depending on the composition of the mobile phase, and they generally increase by adding modifiers, e.g., with 5% of methanol in CO_2, the critical temperature rises to 51 °C and the critical pressure to 105 bar [1]. But there is a continuous transition between the supercritical and the liquid (subcritical) state, and the operator cannot really tell which fluidal stage is actually reached. Diffusion coefficients depend on fluid density so that separation efficiency and fluid compressibility are reduced in the subcritical stage, but otherwise supercritical and subcritical fluids have similar characteristics [2, 16]. Therefore, even "SFC" separations are often performed in the subcritical region at a temperature or pressure below the critical value, sub- and supercritical fluid chromatography are not differentiated most of the time.

When working with SFC, one has to be aware of some phenomena not occurring in regular HPLC. They are based on fluid compressibility and absorbance of the mobile phase on the stationary phase, and primarily occur on flow rate changes and modifier addition [18]. Varying the flow rate naturally changes the internal pressure in the column. Yet, in SFC, this also modifies the mobile phase density and, consequently, its solvent strength and retention factor [23]. Modifiers are usually advantageous to improve compound solubility in the mobile phase, modify solute-mobile-phase interactions, and improve peak resolution [24]. However, in SFC, the proportion of the adsorbed modifier onto the stationary phase is strongly controlled by the mobile phase composition. This explains a different polarity of the stationary phase depending on the percentage and type of modifier added. Consequently, these changes also have an effect on compound retention. More details on the underlying mechanisms, models for prediction, and the separation kinetics of SFC can be found in excellent reviews by Lesellier [16], Poole [17], and Medina [25]. They indicate that kinetic optimization and retention mechanisms are more complex and interdependent on system conditions than in conventional HPLC.

Supercritical Fluid Chromatography – Applications on Natural Products

Only a few reviews on the use of SFC for natural product analysis or isolation have been published to date, and they primarily focus on nonpolar analytes like fat-soluble vitamins [26], fatty acids [27], or essential oils [28, 29]. Some of them are more than ten years old already, so they possibly do not reflect the current state of research anymore. Thus, the following chapters are intended to provide an updated survey of the versatile use of SFC in this area of research, arranged by the type of application, which is either preparative (prep-SFC) or analytical.

Preparative/semipreparative

Supercritical fluids are utilized for preparative purposes in two techniques, SFE and SFC. In the first case, supercritical CO_2, most of the time with modifiers, is used for extraction, a procedure that has been described for many matrices and compounds. Respective applications on food, by-products of industrial processes, environmental samples, pharmaceuticals, and natural products are summarized in a review by Herrero et al. [30]. Con-

This document was downloaded for personal use only. Unauthorized distribution is strictly prohibited.

Table 1 Examples of natural products isolated or purified by prep-SFC.

Biological material	Compounds	Stationary phase	Analytical conditions	Ref.
Pachastrissa sp.	Jaspine B, ent-jaspine B	Chiralpak IC	CO_2 + 25% DCM/MeOH (8/2), 100 bar/35 °C	[41]
Trigonella foenum-graecum	Spirostanol saponins	Chiralpak IC	CO_2 + MeOH (33%), 120 bar/40 °C	[42]
Citrus sinensis	Polymethoxyflavones	Daicel AD	CO_2 + DEA (0.25%) + MeOH (45%), 98 bar/30 °C	[43]
Tuna (*Thunnus thynnus*) oil	Fatty acid esters	Kromasil 10–C18	CO_2, 145 bar/65 °C	[44]
Fish oil	Fatty acid esters	Silica gel	CO_2, 200 bar/80 °C	[45]
Corn bran oil	Phytosterol esters	Amino-propyl silica	CO_2 + EtOH (2–10%), 690 bar/80 °C, 345 bar/40 °C	[46]
Palm oil	Tocopherol, tocotrienols	Nucleosil diol	CO_2 + MTBE (6%), 190 bar/40 °C	[47]
Rosmarinus officinalis	Antioxidants	Supelco SIL diol	CO_2 + EtOH (10%), 130 bar/80 °C	[48]
Rosmarinus officinalis	Carsonic acid	Virids SCF	CO_2 + EtOH (5–20%), 100 bar/40 °C	[49]
Thymus vulgaris	Thymol	Kromasil 60–5SIL	CO_2 + EtOH (5%), 150 bar/50 °C	[50]
Piper methysticum	Kava lactones	C4 Protein	CO_2 + IPA + MeOH (2–10%), 125 bar/80 °C	[51]

cerning natural products, the applications are manifold, ranging from essential oils in ginger [31], chamomile [32], or *Salvia officinalis* [33] or carotenoids in algae [34] to more polar constituents like valerenic acid in *Valeriana officinalis* [35] or xanthones in *Garcinia mangostana* [36]. More recent SFE papers even describe the extraction of prebiotic carbohydrates (lactose, lactulose, galactose, and tagatose) from solid mixtures [37], or free amino acids from broccoli leaves [38]. In the latter publication, the optimum conditions were found to be 250 bar at 70 °C, using supercritical CO_2 with 35% methanol as the solvent; the overall extraction time was 35 min. The obtained yields were comparable to a conventional solvent extraction with methanol/water (7/3).

As a second preparative approach, SFC can be used for the isolation/purification of individual compounds either in the preparative or semipreparative scale. The technique is especially popular for the enantioseparation of pharmaceuticals, because it allows faster separations than conventional HPLC, is convenient to use (no final evaporation of the solvent is required), and a large number of chiral stationary phases with divergent properties is available. Several reviews provide a good overview on this topic [2, 7, 39, 40]. The use of SFC for the isolation of natural compounds is less common, even if some respective reports can be found in the literature (**Table 1**). A few manuscripts describe the isolation of compounds from prepurified mixtures of enantiomers, for example, jaspine B and ent-jaspine B, originally isolated from the marine sponge *Pachastrissa* sp. These cytotoxic phytosphingosines were resolved on laboratory-made equipment using a Chiralpak IC column (250 × 10 mm, 5 µm) and 25% of a DCM/MeOH mixture (80 : 20) in CO_2 as the mobile phase; UV detection was conducted at 270 nm. Both isomers could be obtained with a high purity (99.5%) and yield (80%) [41]. Mixtures of stereoisomeric spirostanol saponins isolated from *Trigonella foenum-graecum* were successfully purified on the same type of stationary phase, this time using a commercially available system (Waters Investigator SFC System) with an ELS detector [42]. Separation conditions were isocratic with 33% methanol in carbon dioxide, 120 bar at 40 °C, and a flow rate of 4 mL/min. Two Chiralpak IC columns *in tandem* (total length 40 cm) had to be used to resolve all isomers satisfactorily. Even the investigated compounds were non-chiral polymethoxyflavones a chiral stationary phase (Daicel AD, 250 × 30 mm, 5 µm) permitted their efficient purification from *Citrus sinensis* (sweet orange) peel extracts [43]. The crude material (cold pressed oil) was first fractionated on silica gel using mixtures of hexanes and ethyl acetate as the solvent. Two of the resulting six fractions were then purified by semipreparative SFC. From "group IV" (80 mg per injection, 25 injections in total), 720 mg of pure tangeretin and 730 mg of 3,5,6,7,8,3′,4′-heptamethoxyflavone were obtained and from "group V", nobiletin and 5,6,7,4′-tetramethoxyflavone. For each separation cycle only 8 min were required, a fact that the authors considered most advantageous compared to conventional procedures. The separation conditions only varied slightly in terms of mobile phase composition ("group IV": 50% methanol with 0.25% DEA and 50% CO_2; "group V": 45% methanol with 0.25% DEA and 55% CO_2). The flow rate (70 mL/min), temperature (30 °C), and pressure (100 bar) were the same. The instrument used was a Berger MultiGram II from Mettler-Toledo.

A slightly larger number of papers report on the isolation or fractionation of natural products from crude herbal material using non-chiral stationary phases. As can be seen from **Table 1**, mostly nonpolar compounds like fatty acid esters, phytosterols, and tocotrienols from different kind of oils (tuna, fish, corn or palm oil) were purified [44–47]. For these matrices, reversed-phase (C-18) or normal-phase (silica, amino-propyl silica, or diol) materials were suitable, using pure carbon dioxide or mixtures with modifiers (e.g., ethanol, MTBE) as the eluent. Referring only to one respective example in detail, Han et al. purified eight tocopherols (α-T, β-T, σ-T, and γ-T) and tocotrienols (α-T_3, β-T_3, σ-T_3, and γ-T_3) from palm oil [47]. In their study, they compared two types of normal-phase material, silica, and diol, and found the latter to be advantageous as Lichrosorb silica did not enable the separation of constituents like β-T and β-T_3. Experimental conditions were optimized in an analytical scale using standard compounds; the actual sample (5 g of crude palm oil) was first saponified with KOH and extracted with hexane. The unsaponifiable matter was dissolved in DCM and this solution was finally separated by SFC. Actual isolation yields were not presented in detail, but quantitative results for one sample were given.

Two manuscripts emphasize the enrichment of antioxidant and antimicrobial compounds from rosemary (*Rosmarinus officinalis*) leaves [48] and the isolation of carsonic acid from the same material [49]. The applied separation conditions were comparable, except in the latter study, the use of an SFC-specific stationary phase (Viridis SFC 2-ethylpyridine from Waters) resulted in a much higher purity of carsonic acid (92%) and a better separation from carnosol. All preparative experiments were conducted with supercritical rosemary extracts, which were dissolved in ethanol (5 mg/mL) and then injected (100 µL per analysis). Under optimized conditions, the target analyte could be concentrated 4.5 times compared to the starting material. Additionally, the content of carsonic acid clearly correlated with the antioxidant properties of rosemary extracts as determined in the DPPH assay. Oth-

This document was downloaded for personal use only. Unauthorized distribution is strictly prohibited.

Table 2 Examples of vitamin analysis by supercritical fluid chromatography.

Biological material	Compounds	Stationary phase	Analytical conditions	Ref.
Carrots, tomatoes	Lycopene, α-carotene, β-carotene + isomers	SB-phenyl-50	CO_2 + EtOH (1%), isobaric, 45–50 °C	[52]
Carrots	All-trans α- and β-carotenes	LiChrospher 100 RP 18, Spherisorb ODS	CO_2 + MeOH/ACN (15%), 150 bar/22 °C	[53]
Scenedesmus sp., *Scenedesmus almeriensis*	Canthaxanthin, astaxanthin, lutein, chinenone, violaxanthin, zeaxanthin, neoxanthin, β-carotene	SunFire C18, Viridis SFC silica 2-ethylpyridine	CO_2 + MeOH (10–25%), 120 bar/32 °C	[58]
Allium cepa (onion)	Linoleic acid, δ-sitosterol, palmitic acid, α-tocopherol	SB-methyl-100	CO_2, 100–320 bar (pressure programming), 280 °C	[59]
Vegetable oils (e.g. wheat-germ, cottonseed)	α-, β-, γ-, δ-tocopherols	ODS-silica gel	CO_2 + MeOH (0.5%), 150 bar/32 °C	[60]
–	vitamin A acetate isomers	Vydac peptide and protein C18	CO_2, 130 bar/60 °C	[64]
–	vitamin K1 isomers	RegisPak C18	CO_2 + MeOH (5%), 150 bar/30 °C	[66]
Palm oil	Coenzym Q 10	Metaphase RP 18	CO_2 + MeOH (6.6%), 180 bar, 50 °C	[67]

er studies reported on the enrichment of thymol from thyme (*Thymus vulgaris*) leaves by SFC [50] and the semipreparative separation of kava lactones [51]; in both, the respective supercritical fluid extracts were used as starting material. The analytical conditions do not differ much from those already described, except that Ashraf-Khorassani et al. used a rather uncommon stationary phase (C_4 protein from Vydac) and two 250 × 4.6 mm columns *in tandem* to resolve seven lactones in *Piper methysticum*.

Analytical

Vitamins: First attempts of carotenoid analysis by SFC were carried out on capillary columns, primarily focusing on the separation of α- and β-carotene isomers. Respective studies with tomato and carrot extracts showed the successful separation of xanthophyll, lycopene, and α- as well as β-carotene by using different SB-cyanopropyl-polymethylsiloxane columns from Lee-Scientific [52]. However, subsequent publications described the use of packed columns only (**Table 2**). Some methodological studies investigated the influence of parameters like temperature, organic modifiers, and stationary phases on the separation of carotenoids [53–55]. Lesselier et al. [54] tested the efficiency of 22 different stationary phases, and in another publication by the same group, the impact of different modifiers on the chromatographic retention and separation of α and β-*cis*/*trans* carotenes was investigated [55]. Aubert et al. [53] observed a general decrease in resolution of the same compounds at a raised temperature, so that the optimum separation was described to be at 22–25 °C, which is in the subcritical region of carbon dioxide already. Increasing the CO_2 pressure led to decreased capacity factors; however, selectivity was independent from temperature and pressure, and was only influenced by modifiers. Pure solvents as well as binary and ternary mixtures were screened, but most of them resulted in a concentration-dependent decrease of the capacity factors of carotenoids. On the other hand, a methanol-acetonitrile mixture (7 : 3) resulted in an improved separation of the respective *trans*/*cis* isomers. Matsubara et al. [56] developed the first comprehensive profiling method for carotenoids and their structural isomers by SFC with MS detection. The method allowed for the separation of β-carotene, lycopene, zeaxanthin, lutein, antheraxanthin, neoxanthin, and violaxanthin in a green algae (*Clamydomonas reinhardtii*) within 15 min on a monomeric ODS column from Merck (Purospher Star RP-18e, 250 × 4.6 mm), at an

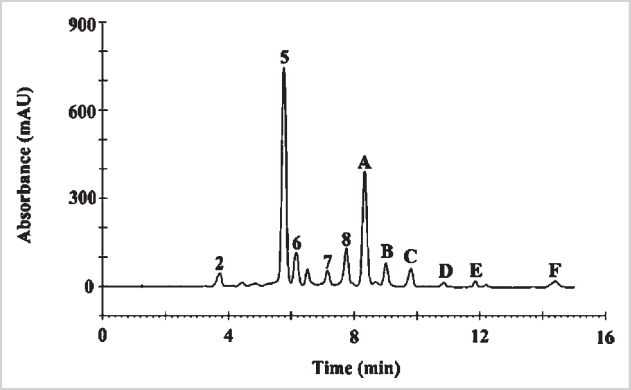

Fig. 3 Supercritical fluid chromatography separation of carotenoids [(**2**) astaxanthin, (**5**) lutein, (**6**) zeaxanthin, (**7**) β-carotene, and (**8**) neoxanthin)] in a *Scenedesmus* sp. extract; compounds **A**–**F** are unidentified chlorophylls. Reproduced with permission from [58].

outlet pressure of 100 bar and a column temperature of 35 °C. The flow rate was set to 3 mL/min using 10–30% methanol with 0.1% (w/w) ammonium formate as the modifier. Under the same conditions, a monolithic silica column (Chromolith Performance RP-18e) permitted an even faster separation of the seven carotenoids. A few years later the same group used similar conditions to investigate epoxy carotenoids, which are degradation products of carotenoid oxidation [57]. Five major carotenoids and six epoxy isomers were successfully identified in human serum using a Puroshere RP 18e phase. In 2012, Abrahamsson et al. [58] described the first validated SFC method for the analysis of major carotenoids in *Scenedesmus sp.*, a microalga (**Fig. 3**). Optimum results were obtained with two columns in series, a SunFire C-18 (4.6 × 250 mm; 5 µm) and a silica-bonded 2-ethylpyridine column (4.6 × 250 mm; 5 µm), both with 100 Å pore size and produced by Waters. CO_2 and methanol (in gradient mode) were employed as the mobile phase, at a flow rate of 5 mL/min and 32 °C column temperature. Method validation revealed similar results compared to conventional HPLC. For example, the LOD for the different carotenoids was between 0.02 and 0.05 mg/L, and recovery rates ranged from 97 to 103%; repeatability was found to be be-

This document was downloaded for personal use only. Unauthorized distribution is strictly prohibited.

tween 0.9% and 2.4% RSD. Accordingly, the authors considered their procedure advantageous because it is the first validated method that is rapid as well as environmentally sustainable (range of methanol as the modifier during analysis: 9–25%).

Several SFC methods have been published for the analysis of tocopherols in plant seeds [59], vegetable oils [60], wheat germs [61], and microalgae [62]. Separations were described on capillary as well as packed columns; in the first case, using pure CO_2 and adjusting the desired selectivity by the choice of stationary phase [59,61]. With packed columns, the use of modifiers was mandatory. In terms of technical advancement, Ibanez et al. [63] described the optimization of a dynamic online SFE-SFC coupling method for tocopherol analysis. They investigated the performance of capillary columns of varying dimensions (180 and 500 µm i.d.) filled with porous silica particles (10 mm, 60 Å, Hichrom), which were coated with different stationary phases (polar: 3–20% Carbowax 20 M; nonpolar: 10% SE-54 (95% methyl- and 5% phenyl-silicone; Supelco)). In spite of generally higher separation efficiencies with smaller inner diameter capillaries, the larger diameter was chosen with regards to the requirements for an online coupling to SFE (i.e., higher sample loading volumes and capacity). In respect to the coating material, only the polar type was able to separate all four analytes (α-, β-, γ-, δ-tocopherol) in 30 min. Coating the particles with higher percentages of Carbowax 20 M (3–10%) resulted in a better resolution, but also increased the retention times.

An interesting study reported on the hyphenation of SFC to ^{1}H NMR for the analysis of vitamin A acetate isomers [64]. By using a Vydac peptide and protein C18 column, five respective *cis*/*trans* isomers could be separated and structurally identified in less than 25 min. Isomerized vitamin A acetate was dissolved in DCM and separated by SFC first, and then was subjected to NMR analysis (Bruker ARX 400) using a specially designed pressure-proof probe head with a volume of 120 µL. The NMR spectra of several phthalates could be recorded even in the continuous flow mode.

To date, there are only two reports describing the separation of vitamin K isomers by SFC, and both were carried out by Berger et al. In an application note, the *cis*- and *trans*-isomers of vitamin K_1 could be resolved in 2 min on an Agilent RX-Sil column (3 × 100 mm, 1.8 µm), which is 3 times faster than conventional HPLC [65]. A recent publication describes the separation of seven enantiomers of vitamin K_1 on a chiral stationary phase (Regis-Pack CLA-1, 250 × 4.6 mm, 5 µm) using 5% methanol in CO_2 as the mobile phase at 2 mL/min, 30 °C, and 150 bar, respectively. However, a baseline separation could not be obtained for all of the compounds [66]. Coenzyme Q_{10}, which is structurally related to vitamins K and E, shows promising health benefits for the treatment of cardiovascular diseases and is a by-product in the extraction of vitamin E from palm oil. The compound could easily be resolved from other constituents in the ethanolic fraction of the unsaponifiable matter of palm oil and palm fiber oil by SFC on RP18 material, as described in the manuscript by Han et al. [67].

Fatty acids and acylglycerols: Fatty acids and acylglycerols, often termed "lipids", are the best-studied compounds in SFC analysis. Several reviews have summarized respective applications mainly focusing on food-related matrices [68–70].

The standard method for fatty acid analysis is definitely gas chromatography. However, most derivatives show low volatility and moderate polarity (e.g., hydroxy fatty acids), so that derivatization is commonly required for their analysis by GC. For SFC, these properties are no limitation, and, accordingly, the separation of fatty acids has been carried out on OTC as well as on packed columns. The advantages and limitations of individual stationary phases are summarized in a paper by Senorans and Ibanez [27]. They conclude that OTCs show high efficiencies, but in terms of loadability, sample capacity, and short analysis times, packed columns are a much better choice. Hirota and Sogabe were the first to describe two-dimensional supercritical fluid chromatography as it is already established for GC [71]. Their system comprised a silica gel column (Super CrestSil, 150 × 4,6 mm; 5 µm) in the first dimension, coupled to an ODS-column (L-column ODS, 50 × 4,6 mm; 5 µm) in the second dimension. Both were maintained under 130 bar pressure, but at a different temperature (first column: 20 °C, second column: 50 °C); pure CO_2 served as the mobile phase, with a flow rate of 2 and 3 mL/min, respectively. After the first column, the effluent was trapped in a tube (1 m × 0.25 mm i.d., 100% methyl silicone, 0.25 µm film thickness) and then flushed on the second-dimension column. Fatty acid methyl esters (FAMEs) in various oils (e.g., fish or soybean) were qualitatively analyzed. First-dimension separations were primarily based on the number of double bonds, while the second-dimension separations depended on the chain length of the analytes. Thus, two orthogonal separation modes could be combined in a unique way. In a subsequent publication of the same group, they modified their setup by also incorporating SFE, so that sample cleanup, extraction, and analysis became feasible in one step [72]. Practical applicability was confirmed for styrene oligomers in polystyrene; natural products were not analyzed.

Two just recently published reviews summarize the publications on the SFC analysis of triglycerides. Bamba et al. concluded that monolithic columns connected in series are preferable for profiling TAGs due to high-resolution, high-throughput, and low-back pressure [69]. When SFC-MS was used, TAGs were usually detected as ammonium adducts $[M + NH_4]^+$, and a cone volume of 35 V was shown to be ideal for the fragmentation of most compounds. The review of Bernal et al. excellently summarized the different stationary phases already described for triglyceride analysis and discussed their impact on retention [68]. The authors observed that the most important factor for separation on capillary columns is the number of acyl-carbons in the respective molecules. On these stationary phases, coelutions occur frequently, so that a combination with MS might be required. Reversed-phase materials are a more selective option when using packed columns, either with UV-, ELSD, or MS detection [73–75]; the described separation conditions were typical for SFC. Lesselier et al. investigated the influence of different polar modifiers and obtained the best results with acetonitrile. An increase in selectivity was noticed when decreasing the temperature from 30 to 5 °C. On the other hand, pressure changes had no big impact on selectivity [73]. A less common approach is the use of SIC in combination with SFC [76]. SIC is based on a cation exchange mechanism, which facilitates the separation of compounds like fatty acids and acylglycerols because of the number, position, and configuration of double bonds. A silica-based strong cation exchanger column (Nucleosil 100–5 SA) was first loaded with silver ions, and their excess was removed by flushing with 1% ammonium acetate solution. After this step, "conventional" SFC separations were performed with acetonitrile and isopropanol (in the gradient mode) as modifiers (**Table 3**). Just recently, Lesselier et al. published an innovative method for triglyceride separation [77]. They developed an UHE/LP-SFC using FPP. With such core-shell materials, high theoretical plate numbers above 100 000 were observed, and as these phases generate a low back-

This document was downloaded for personal use only. Unauthorized distribution is strictly prohibited.

Table 3 Examples for the analysis of triglycerides and terpenes by supercritical fluid chromatography.

Biological material	Compounds	Stationary phase	Analytical conditions	Ref.
Vegetable oil (soybean, sunflower)	Triglycerides	Nucleosil 100–5 SA	CO_2 + ACN/Isopropanol (1.2–12.2%), 150–300 bar/65 °C	[76]
Vegetable oil (argan, rapeseed)	Triacylglyceroles	Kinetex C-18	CO_2 + MeOH/ACN (12%), 100 bar/17 °C	[77]
Humulus lupulus	Myrcene, humulene, caryophyllene	SB-phenyl-5	CO_2, 80–350 bar/80–140 °C, 80–140 °C	[84]
Magnoliae cortex	Magnolol, honokiol	Capcell Pak NH_2	CO_2 + MeOH (5%), 200 bar/45 °C	[85]
Artemisia annua	Artemisinin, artemisinic acid	Nucleosil NH_2	CO_2 + MeOH (3%), 250 bar/40 °C	[86]
Apple pomace (Royal Gala)	Betulinic acid, botulin, lupeol, β-amyrin, uvaol, ursolic acid, erythro-diol, oleanolic acid	Synergi Polar-RP, Viridis ethylpyridine	CO_2 + MeOH (3–10%), 120–180 bar/ 15–25 °C	[87]
Antrodia camphorata	Ergostane triterpenoids	Chiralcel OJ-H	CO_2 + MeOH (10%), 100 bar/40 °C	[89]
Bacopa monnieri	Bacoside A3, bacopaside II	Finepak SIL-5, C-18	CO_2 + MeOH (6%), 180–300 bar, 27–45 °C	[90]

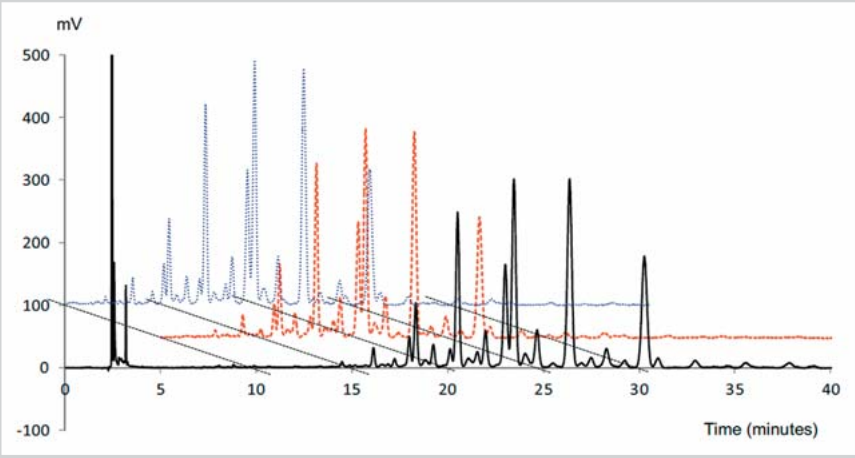

Fig. 4 Separation of rapeseed oil by supercritical fluid chromatography using a superficially porous stationary phase (Kinetex C18) and ELS-detection; influence of modifiers: 10% ACN (full black line), 10% ACN/MeOH 90:10 (red, coarse dashed line), and 12% ACN/MeOH 90:10 (blue, fine dashed line). Reproduced with permission from [77]. (Color figure available online only.)

pressure, several columns could be coupled without the need of an ultrahigh-pressure chromatographic system. Five columns (Kinetex C18, 150 × 4.6 mm, 2.6 µm) *in tandem* at a low temperature (17 °C) and with ACN as a modifier significantly improved the separation of TAGs in vegetable oils compared to previous publications (**Fig. 4**).

Steroids: SFC offers a new perspective for sterol analysis because of its mainly hydrophobic character, the possibility of direct coupling to SFE, and the advantage to renounce from derivatization reactions. Yet, the drawbacks of early publications were long analysis times and missing precision data [78, 79]. Huber et al. presented a rapid and precise method for cholesterol determination in milk fat by SFC [80]. Compared to conventional GC analysis, they used an SB Phenyl 5 (20 m × 0, 5 µm) capillary column for separation with CO_2 as the mobile phase and FID detection. Carbon dioxide density was changed during analysis from 0.012 to 0.45 (g/mL)/min in the gradient mode. The authors considered their approach more accurate, but GC analysis was faster and cheaper. Baiocchi et al. investigated the performance of different capillary columns with either FID or ECD detection [81]. With stationary phases of medium polarity like polyethyleneglycol (Carbowax) and polymethylsilicone, good resolution and reasonable analysis times were reached for several testosterone and progesterone derivatives. For later eluting compounds (trenbolone, corticosterone, cortisone-21-acetate, and prednisolone-21-acetate), ECD was advantageous due to a higher detection sensitivity. However, a significantly reduced flow rate and CO_2 pressure (9 bar) were necessary to achieve a low background noise and to avoid baseline drifts. The SFC analysis of sterols with different polarity and structural features (e.g., androstenone, testosterone, cortisone, or estradiol) on packed columns is described as well, also studying the influence of column materials and modifiers on retention. If silica-based materials are used, nonpolar components like androstenone can be eluted using pure CO_2; low percentages of methanol are required when separating sterols present, such as enanthates, valerates, or capronates. More polar steroids (e.g., keto and hydroxy steroids) might require derivatization prior to SFC analysis [82, 83]. One of the few medicinal plant-related applications is the already mentioned study by Zhao et al., who successfully isolated stereoisomeric spirostanol saponins in *T. foenum-graecum* by SFC-ELSD on Chiralpak IC material [42].

Terpenes and terpernoids: As can be seen in **Table 3**, the major terpenes in the essential oil of hops could be separated by SFC–Fourier-transform infrared spectroscopy (SFC–FTIR) [84]. Optimum SFC separations were achieved on an OTC column (SB-Phenyl-5) in 60 min, at a constant temperature of 80 °C, and a flow rate of 3 mL/min CO_2. Infrared spectra of the major constituents were taken as films deposited on AgCl discs and compared with those obtained after SFC separation in an IR flow cell (Perkin-Elmer 1760 x) within a scan range of 3500–800 cm^{-1}. The FTIR spectra indicated differences depending on the hop variety and can be a useful tool to determine the origin of different hop oils. Suto et al. described an online-coupled SFE-SFC method for the

This document was downloaded for personal use only. Unauthorized distribution is strictly prohibited.

determination of honokiol and magnolol in magnolia bark extracts [85]. SFE was carried out for 1 min at 200 bar pressure and a temperature of 45 °C using supercritical CO_2 with 5% methanol. The extract was then preconcentrated by trapping on an amino column (Capcell Pak NH_2). For SFC analysis, the extraction vessel was bypassed, and the methanol concentration increased to 15% so that the trapped analytes eluted from the amino column. With this setup separations required only 3 min. For the analysis of diterpenes in rosemary extracts see chapter "Preparative/semipreparative applications".

The SFC separation of two sesquiterpene lactones in *Artemisia annua*, artemisinin and artemisinic acid, was described by Kohler et al. [86]. They compared two different approaches, either using a packed aminopropyl silica column (Nucleosil NH_2) together with ELSD, or a DB-WAX capillary column and an FID. Both methods were validated and analytical results were comparable (e.g., LOD for artemisinin: 0.01 µg/mL by SFC-ELSD, 0.03 µg/mL by SFC-FID), but the method using a packed column was much faster. It allowed the separation of both analytes in less than 8 min compared to 25 min by capillary SFC. As for sesquiterpenes, the number of SFC papers describing the analysis of triterpenoids is very small. Among the few is one describing the assessment of pentacyclic triterpenes in an apple pomace extract [87]. The overall best results were achieved on a Synergi polar-RP-column, while Viridis ethylpyridine material seemed to be preferable for mono-ol and di-ol acidic triterpenoids (**Fig. 5**). Additionally, it could be used for semipreparative approaches. A mobile phase typical for SFC was selected (CO_2 with 3% methanol, isocratic elution) at a flow rate of 3 mL/min and a temperature of 20 °C. As the compounds of interest showed rather weak UV absorbance, an ELSD (Sedex 85) was employed for detection. Tavares et al. published the separation of four triterpene acids by capillary SFC, but utilized these compounds as standards only without showing a practically relevant application [88]. Only recently the separation of ergostane triterpenoids in the medicinal mushroom *Antrodia camphorata* has been reported [89]. The (R)- and (S)-forms for each of the seven enantiomers could be well resolved on a Chiralcel OJ-H column (4.6 × 250 mm, 5 µm), eluted with 10% MeOH in CO_2 at 2 mL/min, with a back pressure of 120 bar and a column temperature of 40 °C. The fact that low-polarity epimers like antcin A and antcin B could be separated was most favorable, because respective compounds are difficult to resolve by conventional RP-HPLC. Last but not least, bacoside A3 and bacopaside II, two major triterpenoid saponins in *Bacopa monnieri*, could be quantified in the respective extracts using SFC [90]. The assay was fully validated and compared to HPTLC. Both approaches were considered to be equally useful, HPTLC for routine applications and SFC for improved resolution and increased separation speed (the required analysis time was less than 12 min). Citrus oil was the focus of a study by Desmortreux and colleagues, but they investigated no terpenes, but furocoumarins by SFC [91].

Polyprenols: Polyprenol is the generic name for linear 1,4-polypreprenyl alcohols, compounds that occur as linear polymers in plants, animals, and microorganisms. Their analysis by SFC was described in several publications of Bamba et al. [92–94]. For method development, the authors utilized either mixtures of polyprenols with a small molecular weight (Prenol C80-110 from Sigma-Aldrich) or long-chain derivatives isolated from *Eucommia ulmoides*, a rubber producing plant. The latter showed a molecular weight of up to 1 000 000 Da, which was determined by MALDI-TOF-MS [94]. For these compounds, a packed column with phenyl-modified silica material (Inertsil Ph-3) was the optimum

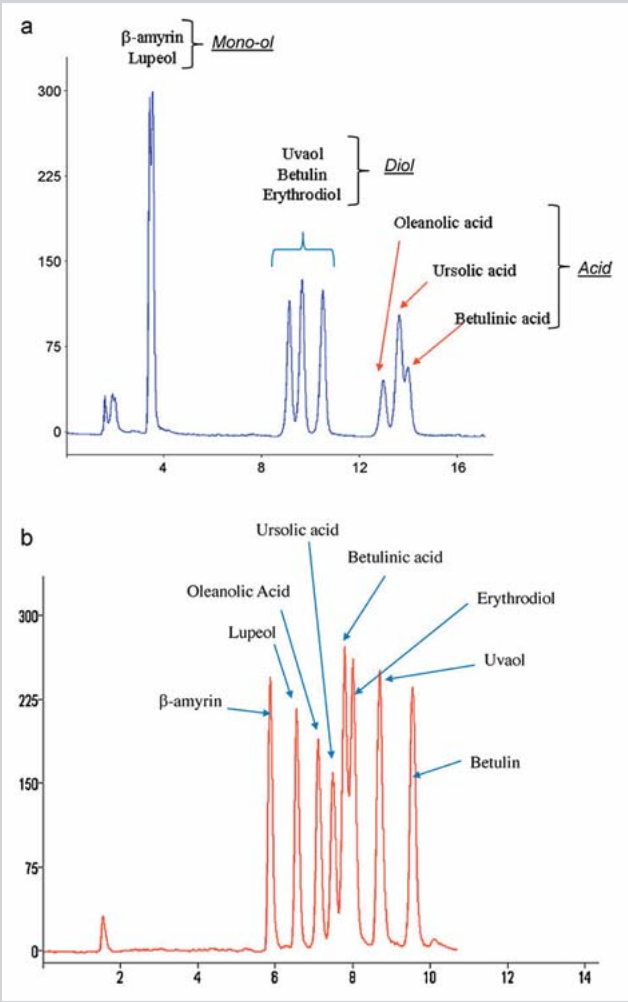

Fig. 5 SFC separation of eight triterpenoid standards on two different stationary phases, (**a**) Viridis ethyl-pyridine and (**b**) Synergi polar-RP. Reproduced with permission from [87]. (Color figure available online only.)

choice, and THF was required as a modifier to achieve baseline separations. Small weight polyprenols could be well resolved on a regular ODS column (Inertsil ODS 3, 250 × 4.6 mm, 5 µm) already at a comparatively high column temperature of 130 °C. The widely used modifier methanol did not result in satisfactory separations and, hence, ethanol was added instead. Mainly polyprenols with polymerization degrees of 15–23 were found in the bark and seeds of *E. ulmoides* (**Fig. 6**) [93].

Alkaloids: Few applications focus on the analysis of alkaloids by SFC. They describe the determination of nicotine in tobacco [95], atropine in *Atropa belladonna* [96], capsaicinoides in the placenta of *Capsicum annuum* [97], opium alkaloids from poppy straw extracts [98], and of pyrrolizidine alkaloids in *Senecio anonymus* [99]. All studies were published at least 15 years ago, and they do not report any new technical peculiarities, except for two things. Nicotine was monitored by an uncommon detection mode, IMS. It is based on the principle that gas-phase ions, produced from the analytes, will require different times to drift through a tube to reach the ion collector, depending on their charge and mass [95]. This detection mode showed to be highly sensitive for nicotine (LOD = 0.35 ng) and could be directly coupled to SFE-SFC. For the SCF analysis of atropine, a special mo-

This document was downloaded for personal use only. Unauthorized distribution is strictly prohibited.

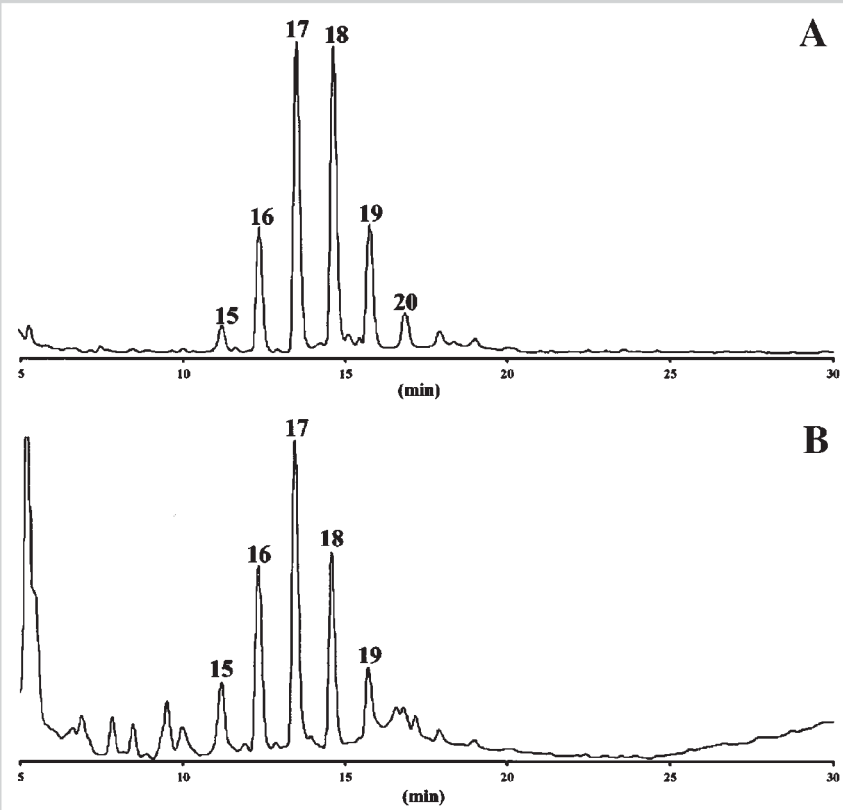

Fig. 6 Distribution of polyprenols in *Eucommia ulmoides* bark (**A**) and seeds (**B**) as determined by supercritical fluid chromatography; numbers represent polymerization degree. Reproduced with permission from [93].

bile phase was required due to the compounds polar character. Methanol did not have sufficient solvent strength to elute this compound from the column used (Spherisorb CN), but by adding 0.5% diethylamine, a satisfactory separation of atropine and the internal standard terbutalin could be achieved in 10 min. Peak-shape could further be improved by also adding 0.5% trifluoroacetic acid to methanol [96].

Flavonoids: As for alkaloids, the number of analytical papers on flavonoid analysis by SFC is small. In 2006, Li et al. used this technique to determine nobiletin, a polymethoxylated flavone found in sweet orange (*C. sinensis*) peel, and its metabolites in mouse urine [100]. SFC on a chiral column (Chiral-Pak AD-H; 250 × 4.6 mm; 5 µm) was helpful to separate two derivatives (3′- and 4′-demethylnobiletin) that could not be resolved by HPLC; all other metabolites were monitored by LC-MS. In a subsequent publication, Wang et al. compared different chiral and non-chiral column materials for the separation of the same constituents by SFC and normal-phase chromatography [101]. Because of higher resolution efficiencies, achiral columns showed advantages over chiral materials in SFC, and in terms of selectivity they were comparable. However, compared to normal-phase chromatography, huge differences were observed. For example, by SFC, the two before-mentioned nobiletin derivatives could be separated on a Chiralpak AD column with a retention time difference of 10 min. By normal-phase chromatography, they eluted (on the same phase) as barely resolved, broad signals. An extensive study investigating the effect of mobile-phase composition on retention and selectivity in achiral supercritical fluid chromatography was published 2013; for this purpose, several flavones were used as model compounds [102]. The authors stated that in the achiral SFC mobile phase, composition is merely a fine optimization parameter, which should be varied only after already having selected the most appropriate stationary phase. This stands in contrast to chiral SFC, for which the mobile-phase composition is usually most important.

Just recently, Ganzera reported on the separation of several isoflavones, representing major constituents in soy (*Glycine max*), red glover (*Trifolium pratense*), and kudzu (*Pueraria lobata*), by SFC [103]. Within 8 min, nine compounds could be baseline resolved on an Acquity UPC^2 BEH column (1.7 µm particle size) from Waters; the mobile phase comprised CO_2 and methanol with 0.05% phosphoric acid. Other applications that describe the use of SFC for the analysis of phenolic compounds are not related to natural products, but they focus on environmental issues instead [104, 105].

Conclusions

▼

Trying to summarize the current standing of SFC in analytical sciences, especially focusing on natural products related applications, results in the following observations. The technique, even if it is comparatively old and shows significant advantages over established procedures (e.g., faster, more efficient, environmental friendly), still has to be termed as an "exotic" analytical alternative. This is possibly due to the fact that commercially available, robust instruments are only sold for a comparatively short time. Many previous studies were conducted on laboratory-made equipment, which is interesting in respect to technical advancement but not suitable for routine use in industry where, for example, GMP guidelines need to be followed. Furthermore, many respective reports are rather old (≥ 10 years) and describe the application of today barely used OTC materials. All this could be misinterpreted in a sense that research has slowed down because

This document was downloaded for personal use only. Unauthorized distribution is strictly prohibited.

of lacking interest, potential, or relevance. The opposite is the case. From more recent reports it is clearly evident that SFC is versatile in respect to technical modifications (e.g., mode of detection, selection of stationary phase) and analytes. When it comes to economic aspects, a state-of-the-art SFC system is definitely more expensive than a comparable conventional HPLC. Yet, its operation is cheaper because inexpensive CO_2 is primarily used, low amounts of solvent are consumed, and nearly no waste is generated. It could be shown that the theoretical advantages of SFC can be transferred to relevant separation problems and complex matrices like herbal extracts. Excellent separations of compounds have been described that are not possible with conventional approaches. Together with current developments on the instrumental sector, it is therefore only a matter of time till SFC finally reaches its desired place in analytical sciences.

Conflict of Interest

The authors declare no conflict of interest.

References

1 *Saito M.* History of supercritical fluid chromatography: instrumental development. J Biosci Bioeng 2013; 115: 590–599
2 *De Klerck K, Mangelings D, Vander Heyden Y.* Supercritical fluid chromatography for the enantioseparation of pharmaceuticals. J Pharmaceut Biomed 2012; 69: 77–92
3 *Sandra P, Pereira A, Dunkle M, Brunelli C, David F.* Green chromatography (Part 2): The role of GC and SFC. LCGC Europe 2010; 23: 396–405
4 *Taylor LT.* Packed column supercritical fluid chromatography of hydrophilic analytes via water-rich modifiers. J Chromatogr A 2012; 1250: 196–204
5 *Farrell WP, Aurigemma CM, Masters-Moore DF.* Advances in high throughput supercritical fluid chromatography. J Liq Chromatogr Relat Techno 2009; 32: 1689–1710
6 *Bamba T.* Application of supercritical fluid chromatography to the analysis of hydrophobic metabolites. J Sep Sci 2008; 31: 1274–1278
7 *Wang RQ, Ong TT, Ng SQ, Tang W.* Recent advances in pharmaceutical separations with supercritical fluid chromatography using chiral stationary phases. TrAC 2012; 37: 83–100
8 *Klesper E, Corwin AH, Turner DA.* High pressure gas chromatography above critical temperatures. J Org Chem 1962; 27: 700–701
9 *Sie ST, Van Beersum W, Rjinders GWA.* High-pressure gas-chromatography and chromatography with supercritical fluids. 1. The effect of pressure on partition coefficients in gas-liquid chromatography with carbon dioxide as carrier gas. Sep Sci 1966; 1: 459–490
10 *Jentoft RE, Gouw TH.* Pressure-programmed supercritical fluid chromatography of wide molecular weight range mixtures. J Chromatogr Sci 1970; 8: 138–142
11 *Hartmann W, Klesper E.* Preparative supercritical fluid chromatography of styrene oligomers. J Polym Lett Ed 1977; 15: 713–719
12 *Randall LG, Wahrhaftig AL.* Dense gas chromatograph/mass spectrometer interface. Anal Chem 1978; 50: 1703–1705
13 *Novotny M, Springston SR, Peaden PA, Fjelsted JC, Lee ML.* Capillary supercritical fluid chromatography. Anal Chem 1981; 53: 407A-414A
14 *Smith RM.* Supercritical fluids in separation science–the dreams, the reality and the future. J Chromatogr A 1999; 856: 83–114
15 *Gere DR, Board R, McManigill D.* Supercritical fluid chromatography with small particle diameter packed columns. Anal Chem 1982; 54: 736–740
16 *Lesellier E.* Retention mechanisms in super/subcritical fluid chromatography on packed columns. J Chromatogr A 2009; 1216: 1881–1890
17 *Poole CF.* Stationary phases for packed-column supercritical fluid chromatography. J Chromatogr A 2012; 1250: 157–171
18 *Lesellier E.* Overview of the retention in subcritical fluid chromatography with varied polarity stationary phases. J Sep Sci 2008; 31: 1238–1251
19 *Brunelli C, Gorecki T, Zhao Y, Sandra P.* Corona-charged aerosol detection in supercritical fluid chromatography for pharmaceutical analysis. Anal Chem 2007; 79: 2472–2482
20 *Vanthuyne N, Roussel C.* Chiroptical detectors for the study of unusual phenomena in chiral chromatography. Top Curr Chem 2013; 340: 107–151
21 *Lesellier E, Valarche A, West C, Dreux M.* Effects of selected parameters on the response of the evaporative light scattering detector in supercritical fluid chromatography. J Chromatogr A 2012; 1250: 220–226
22 *Li F, Hsieh Y.* Supercritical fluid chromatography-mass spectrometry for chemical analysis. J Sep Sci 2008; 31: 1231–1237
23 *Gurdale K, Lesellier E, Tschapla A.* Study of dead volume measurement in packed subcritical fluid chromatography with ODS columns and carbon dioxide-modifier mobile phases. J Chromatogr A 2000; 866: 241–251
24 *Berger TA, Deye JF.* Role of aditives in packed column supercritical fluid chromatography: supression of solute ionization. J Chromatogr A 1991; 547: 377–392
25 *Medina I.* Determination of diffusion coefficients for supercritical fluids. J Chromatogr A 2012; 1250: 124–140
26 *Turner C, King JW, Mathiasson L.* Supercritical fluid extraction and chromatography for fat-soluble vitamin analysis. J Chromatogr A 2001; 936: 215–217
27 *Senorans FJ, Ibanez E.* Analysis of fatty acids in foods by supercritical fluid chromatography. Anal Chim Acta 2002; 465: 131–144
28 *Fornari T, Vicente G, Vazquez E, Garcia-Risco MR, Reglero G.* Isolation of essential oil from different plants and herbs by supercritical fluid extraction. J Chromatogr A 2012; 1250: 34–48
29 *Sovova H.* Modeling the supercritical fluid extraction of essential oils from plant materials. J Chromatogr A 2012; 1250: 27–33
30 *Herrero M, Mendiola JA, Cifuentes A, Ibanez E.* Supercritical fluid extraction: recent advances and applications. J Chromatogr A 2010; 1217: 2495–2511
31 *Zhannan Y, Shiqiong L, Quancai P, Chao Z, Zhengwen Y.* GC-MS analysis of the essential oil of coral ginger (*Zingiber corallinum* Hance) rhizome obtained by supercritical fluid extraction and steam distillation extraction. Chromatographia 2009; 69: 785–790
32 *Kotnik P, Skerget M, Knez J.* Supercritical fluid extraction of chamomile flower heads: comparison with conventional extraction, kinetics and scale-up. J Supercrit Fluids 2007; 43: 192–198
33 *Aleksovski SA, Sonova H.* Supercritical CO_2 extraction of *Salvia officinalis* L. J Supercrit Fluids 2007; 40: 239–245
34 *Gouveia L, Nobre BP, Marcelo FM, Mrejen S, Cardoso MT, Palavra AF, Mendes RL.* Functional food oil coloured by pigments extracted from microalgae with supercritical CO_2. Food Chem 2007; 101: 717–723
35 *Salimi A, Fatemi S, Zakizadeh Nei Nei H, Safaralie A.* Mathematical modeling of supercritical extraction of valerenic acid from *Valeriana officinalis* L. Chem Eng Technol 2008; 31: 1470–1480
36 *Zarena AS, Udaya Sankar K.* Supercritical carbon dioxide extraction of xanthones with antioxidant activity from *Garcinia mangostana*. Characterization by HPLC/LC-ESI-MS. J Supercrit Fluids 2009; 49: 330–337
37 *Montanes F, Fornari T, Olano A, Ibanez E.* Isolation of prebiotic carbohydrates by supercritical fluid extraction. Scaling-up and economical feasibility. J Chromatogr A 2012; 1250: 92–98
38 *Arnaiz E, Bernal J, Martin MT, Nozal MJ, Bernal JL, Toribio L.* Supercritical fluid extraction of free amino acids from broccoli leaves. J Chromatogr A 2012; 1250: 49–53
39 *Mangelings D, Vander Heyden Y.* Chiral separations in sub- and supercritical fluid chromatography. J Sep Sci 2008; 31: 1252–1273
40 *Miller L.* Preparative enantioseparations using supercritical fluid chromatography. J Chromatogr A 2012; 1250: 250–255
41 *Santos C, Fabing I, Saffon N, Ballereau S, Génisson Y.* Rapid access to jaspine B and its enantiomer. Tetrahedron 2013; 69: 7227–7233
42 *Zhao Y, McCauley J, Pang X, Kang L, Yu H, Zhang J, Xiong C, Chen R, Ma B.* Analytical and semipreparative separation of 25 (R/S)-spirostanol saponin diastereomers using supercritical fluid chromatography. J Sep Sci 2013; 36: 3270–3276
43 *Li S, Lambros T, Wang Z, Goodnow R, Ho CT.* Efficient and scalable method in isolation of polymethoxyflavones from orange peel extract by supercritical fluid chromatography. J Chromatogr B 2007; 846: 291–297
44 *Alkio M, Gonzalez C, Jäntti M, Aaltonen O.* Purification of polyunsaturated fatty acid esters from tuna oil with supercritical fluid chromatography. J Am Oil Chem Soc 2000; 77: 315–321
45 *Pettinello G, Bertucco A, Pallado P, Stassi A.* Production of EPA enriched mixtures by supercritical fluid chromatography: from laboratory scale to the pilot plant. J Supercrit Fluids 2000; 19: 51–60

This document was downloaded for personal use only. Unauthorized distribution is strictly prohibited.

46 *Taylor SL, King JW.* Optimization of the extraction and fractionation of corn bran oil using analytical supercritical fluid instrumentation. J Chrom Sci 2000; 38: 91–94
47 *Han NM, May CY, Ngan MA, Hock CC, Hashim MA.* Isolation of palm tocols using supercritical fluid chromatography. J Chrom Sci 2004; 42: 536–539
48 *Ramirez P, Garcia-Risco MR, Santoyo S, Senorans FJ, Ibanez E, Reglero G.* Isolation of functional ingredients from rosemary by preparative-supercritical fluid chromatography (Prep-SFC). J Pharmaceut Biomed 2006; 41: 1606–1613
49 *Vicente G, Garcia-Risco MR, Fornari T, Reglero G.* Isolation of carnosic acid from rosemary extracts using semi-preparative supercritical fluid chromatography. J Chromatogr A 2013; 1286: 208–215
50 *Garcia-Risco MR, Vicente G, Reglero G, Fornari T.* Fractionation of thyme (*Thymus vulgaris* L.) by supercritical fluid extraction and chromatography. J Supercrit Fluids 2011; 55: 949–954
51 *Ashraf-Khorassani M, Taylor LT, Martin MT.* Supercritical fluid extraction of kava lactones from kava root and their separation via supercritical fluid chromatography. Chromatographia 1999; 50: 287–292
52 *Schmitz HH, Artz WE, Poor CL, Dietz JM, Erdmann JW.* High-performance liquid chromatography and capillary supercritical-fluid chromatography separation of vegetable carotenoids and carotenoid isomers. J Chromatogr A 1989; 479: 261–268
53 *Aubert MC, Lee CR, Krstulocic AM, Lesellier E, Pechard MR, Tchapla A.* Separation of trans/cis- alpha- and beta-carotenes by supercritical fluid chromatography. I. Effects of temperature, pressure and organic modifiers on retention of carotenes. J Chromatogr 1991; 557: 47–58
54 *Lesellier E, Tchapla A, Pechard MR, Lee CR, Krstulocic AM.* Separation of trans/cis alpha- and beta-carotenes by supercritical fluid chromatography. II. Effect of type of octadecyl-bonded stationary phase on retention and selectivity of carotenes. J Chromatogr 1991; 557: 59–67
55 *Lesellier E, Krstulocic AM, Tchapla A.* Influence of the modifiers on the nature of the stationary phase and the separation of carotenes in subcritical fluid chromatography. Chromatographia 1993; 36: 275–282
56 *Matsubara A, Bamba T, Ishida H, Fukusaki E, Hirata K.* Highly sensitive and accurate profiling of carotenoids by supercritical fluid chromatography coupled with mass spectrometry. J Sep Sci 2009; 32: 1459–1464
57 *Matsubara A, Uchikata T, Shinohara M, Nishiumi S, Yoshida M, Fukusaki E, Bamba T.* Highly sensitive and rapid profiling method for carotenoids and their epoxidized products using supercritical fluid chromatography coupled with electrospray ionzation-triple quadrupole mass spectrometry. J Biosci Bioeng 2012; 113: 782–787
58 *Abrahamsson V, Rodriguez-Meizoso I, Turner C.* Determination of carotenoids in microalgae using supercritical fluid extraction and chromatography. J Chromatogr A 2012; 1250: 63–68
59 *Hannan RM, Hill HH.* Analysis of lipids in aging seed using capillary supercritical fluid chromatography. J Chromatogr 1991; 547: 393–401
60 *Yarita T, Nomura A, Abe K, Takeshita Y.* Supercritical fluid chromatographic determination of tocopherols on an ODS-silica gel column. J Chromatogr A 1994; 679: 329–334
61 *Saito M, Yamauchi Y, Inomata K, Kottkamp W.* Enrichment of tocopherols in wheat germ by directly coupled supercritical fluid extraction with semi-preparative supercritical fluid chromatography. J Chrom Sci 1989; 27: 79–85
62 *Gomez-Coronado DJM, Ibanez E, Ruperez FJ, Barbas C.* Tocopherol measurement in edible products of vegetable origin. J Chromatogr A 2004; 1054: 227–233
63 *Ibanez E, Palacios J, Reglero G.* Analysis of tocopherols by on-line coupling supercritical fluid extraction – supercritical fluid chromatography. J Microcolumn Sep 1999; 11: 605–611
64 *Braumann U, Händel H, Strohschein S, Spraul M, Krack G, Ecker R, Albert K.* Separation and identification of vitamin A acetate isomers by supercritical fluid chromatography – ^{1}H NMR coupling. J Chromatogr A 1997; 761: 336–340
65 *Berger T, Berger B.* Two minute separation of the cis- and trans-isomers of vitamin K1 without chlorinated solvents or acetonitrile. Chromatographia 2013; 76: 109–115
66 *Berger T, Berger B.* Chromatographic resolution of 7 of 8 stereoisomers of vitamin K1 on an amylose stationary phase using supercritical fluid chromatography. Chromatographia 2013; 76: 549–552
67 *Han NM, May CY, Ngan MA, Hock CC, Hashim MA.* Separation of coenzyme Q10 in palm oil by supercritical fluid chromatography. Am J App Sci 2006; 3: 1929–1932
68 *Bernal JL, Martin MT, Toribio L.* Supercritical fluid chromatography in food analysis. J Chromatogr A 2013; 1313: 24–36
69 *Bamba T, Lee JW, Matsubara A, Fukusaki E.* Metabolic profiling of lipids by supercritical fluid chromatography/mass spectrometry. J Chromatogr A 2012; 1250: 212–219
70 *Lesellier E.* Analysis of non-saponifiable lipids by super-/subcritical-fluid chromatography. J Chromatogr A 2001; 936: 201–214
71 *Hirata Y, Sogabe I.* Separation of fatty acid methyl esters by comprehensive two-dimensional supercritical fluid chromatography with packed columns and programming of sampling duration. Anal Bioanal Chem 2004; 378: 1999–2003
72 *Okamoto D, Hirata Y.* Development of supercritical fluid extraction coupled to comptehensive two-dimensional supercritical fluid chromatography (SFE-SFCxSFC). Anal Sci 2006; 22: 1437–1440
73 *Lesellier E, Tchapla A.* Separation of vegetable oil triglycerides in subcritical fluid chromatography with octadecyl packed columns and CO_2/modifier mobile phases. Chromatographia 2000; 51: 688–694
74 *Lee JW, Nagai T, Gotoh N, Fukusaki E, Bamba T.* Profiling of regioisomeric triacylglycerols in edible oils by supercritical fluid chromatography/tandem mass spectrometry. J Chromatogr B 2014; 966: 193–199
75 *Lee JW, Uchikata T, Matsubara A, Nakamura T, Fukusaki E, Bamba T.* Application of supercritical fluid chromatography/mass spectrometry to lipid profiling in soybean. J Biosci Bioeng 2012; 113: 262–268
76 *Sandra P, Medvedovici A, Zhao Y, David F.* Characterization of triglycerides in vegetable oils by silver-ion packed-column supercritical fluid chromatography coupled to mass spectrometry with atmospheric pressure chemical ionization and coordination ion spray. J Chromatogr A 2002; 974: 231–241
77 *Lesellier E, Latos A, Lopes de Oliveira A.* Ultra high efficiency/low pressure supercritical fluid chromatography with superficially porous particles for triglyceride separation. J Chromatogr A 2014; 1327: 141–148
78 *David PA, Novotny M.* Analysis of steroids by capillary supercritical fluid chromatography with phosphorus-selective detection. J Chromatogr 1989; 461: 111–120
79 *King JW.* Applications of capillary supercritical fluid chromatography-supercritical fluid extraction to natural products. J Chrom Sci 1990; 28: 9–14
80 *Huber W, Molero A, Pereyra C, Martinez de la Ossa E.* Determination of cholesterol in milk fat by supercritical fluid chromatography. J Chromatogr A 1995; 715: 333–336
81 *Baiocchi C, Giacosa D, Roggero MA, Marengo E.* Analysis of steroids by capillary supercritical fluid chromatography with flame-ionization and electron-capture detectors. J Chrom Sci 1996; 34: 399–404
82 *Tuomola M, Hakala M, Manninen M.* Determination of androstenone in pig fat using packed column supercritical fluid chromatography-mass spectrometry. J Chromatogr B 1998; 719: 25–30
83 *Hanson M.* Aspects of retention behaviour of steroids in packed column supercritical fluid chromatography. Chromatographia 1995; 40: 58–68
84 *Auerbach RH, Dost K, Davidson G.* Characterization of varietat differences in essential oil components of Hops (*Humulus lupulus*) by SFC-FTIR spectroscopy. J AOAC Int 2000; 83: 621–626
85 *Suto K, Ito Y, Sagara K, Itokawa H.* Determination of magnolol and honokiol in Magnoliae Cortex using supercritical fluid chromatography on-line coupled with supercritical fluid extraction by on-column trapping. J Chromatogr A 1997; 786: 366–370
86 *Kohler M, Haerdi W, Christen P, Veuthey JL.* Determination of artemisinin and artemisinic acid by capillary and packed supercritical fluid chromatograppy. J High Resol Chromatogr 1997; 20: 62–66
87 *Lesellier E, Destandau E, Grigoras C, Fougere L, Elfakir C.* Fast separation of triterpenoids by supercritical fluid chromatography/evaporative light scattering detector. J Chromatogr A 2012; 1268: 157–165
88 *Tavares MCH, Yariwake Vilegas JH, Lancas FM.* Separation of underivatized triterpene acids by capillary supercritical fluid chromatography. Phytochem Anal 2001; 12: 134–137
89 *Qiao X, An R, Hunag Y, Ji S, Li L, Tzeng YM, Guo DA, Ye M.* Separation of 25R/S-ergostane triterpenoids in the medicinal mushroom *Antrodia camphorata* using analytical supercritical-fluid chromatography. J Chromatogr A 2014; 1358: 252–260
90 *Agrawal H, Kaul N, Paradkar AR, Mahadik KR.* Separation of bacoside A3 and bacopaside II, major triterpenoid saponins in *Bacopa monnieri*, by HPTLC and SFC. Application of SFC in implementation of uniform design for herbal drug standardization, with thermodynamic study. Acta Chrom 2006; 17: 125–150
91 *Desmortreux C, Rothaupt M, West C, Lesellier E.* Improved separation of furocoumarins of essential oils by supercritical fluid chromatography. J Chromatogr A 2009; 1216: 7088–7095

This document was downloaded for personal use only. Unauthorized distribution is strictly prohibited.

92 *Bamba T, Fukusaki E, Kajiyama S, Ute K, Kitayama T, Kobayashi A.* High-resolution analysis of polyprenols by supercritical fluid chromatography. J Chromatogr A 2001; 911: 113–117
93 *Bamba T, Fukusaki E, Kajiyama S, Ute K, Kitayama T, Kobayashi A.* The occurence of geometric polyprenol isomers in the rubber-producing plant, *Eucommia ulmoides* Oliver. Lipids 2001; 7: 727–732
94 *Bamba T, Fukusaki E, Nakazawa Y, Sato H, Ute K, Kitayama T, Kobayashi A.* Analysis of long-chain polyprenols using supercritical fluid chromatography and matrix-assisted laser desorption ionization time-of-flight mass spectrometry. J Chromatogr A 2003; 995: 203–207
95 *Wu C, Siems WF, Hill HH, Hannan RM.* Analytical determination of nicotine in tobacco by supercritical fluid chromatography-ion mobility detection. J Chromatogr A 1998; 811: 157–161
96 *Dost K, Davidson G.* Development of a packed-column supercritical fluid chromatography/atmospheric pressure chemical-ionisation mass spectrometric technique for the analysis of atropine. J Biochem Biophys Methods 2000; 43: 125–134
97 *Sato K, Sasaki SS, Goda Y, Yamada T, Nunomura O, Ishikawa K, Maitani T.* Direct connection of supercritical fluid extraction and supercritical fluid chromatography as a rapid quantitative method for capsaicinoids in placentas of *Capsicum*. J Agric Food Chem 1999; 47: 4665–4668
98 *Lanicot JL, Caude M, Rosset R.* Separation of opium alkaloids by carbon dioxide sub- and supercritical fluid chromatography with packed columns. J Chromatogr 1988; 437: 351–364
99 *Holzer G, Zalkow LH, Asibal CF.* Capillary supercritical fluid chromatography of pyrrolizidine alkaloids. J Chromatogr 1987; 400: 317–322
100 *Li S, Wang Z, Sang S, Huang MT, Ho CT.* Identification of nobiletin metabolites in mouse urine. Mol Nutr Food Res 2006; 50: 291–299
101 *Wang Z, Li S, Jonca M, Lambros T, Fergusson S, Goodnow R, Ho CT.* Comparison of supercritical fluid chromatography and liquid chromatography for the separation of urinary metabolites of nobiletin with chiral and non-chiral stationary phases. Biomed Chromatogr 2006; 20: 1206–1215
102 *West C, Lesellier E.* Effects of mobile phase composition on retention and selectivity in achiral supercritical fluid chromatography. J Chromatogr A 2013; 1302: 152–162
103 *Ganzera M.* Supercritical fluid chromatography for the separation of isoflavones. J Pharmaceut Biomed 2015; 107: 364–369
104 *Bernal JL, Nozal MJ, Toribio L, Serna ML, Borrull F, Marce RM, Pocurull E.* Determination of phenolic compounds in water samples by online solid-phase extraction. Supercritical-fluid chromatography with diode-array detection. Chromatographia 1997; 46: 295–300
105 *Ramsey ED, Minty B, Mccullagh MA, Games DE, Rees AT.* Analysis of phenols in water at the ppb level using direct supercritical fluid extraction of aqueous samples combined online with supercritical fluid chromatography-mass spectrometry. Anal Commun 1997; 34: 3–6

This document was downloaded for personal use only. Unauthorized distribution is strictly prohibited.